EMFO LIBRARY

TM 11-847

DEPARTMENT OF THE ARMY TECHNICAL MANUAL

Ch 2, 4, 10

EMFO LIBRARY

RADIO TRANSMITTING SET AN/FRT

EMFO LIBRARY

DEPARTMENT OF THE ARMY • FEBRUARY 1955

DEPARTMENT OF THE ARMY
WASHINGTON 25, D. C., *18 February 1955*

TM 11–847 is published for the use of all concerned.

BY ORDER OF THE SECRETARY OF THE ARMY:

M. B. RIDGWAY,
General, United States Army,
Chief of Staff.

OFFICIAL:
JOHN A. KLEIN,
Major General, United States Army,
The Adjutant General.

310-1 60 18 Oct 67

EMFO LIBRARY

RADIO TRANSMITTING SETS AN/FRT-22 AND AN/FRT-22A

CHANGE No. 10

HEADQUARTERS
DEPARTMENT OF THE ARMY
WASHINGTON, D.C., *4 April 1966*

TM 11-847, 18 February 1955, is changed as follows so that the manual also applies to Radio Transmitting Set AN/FRT-22A.

Note. The parenthetical reference to previous changes (*example:* page 1 of C 2) indicates that pertinent material was published in that change.

Add the following note to each figure listed below.

Note. REFER TO MWO 11-5820-280-30/1 FOR LOCATION OF ADDED COMPONENTS.

Page 294, figures 219 and 220.

Page 295, figure 221.

Page 296, figure 222.

Page 297, figure 223.

Page 298, figure 224.

Page 1. Make the following changes:

(As added by C 5, 27 Jul 59) Add the following note below the title of chapter 1.

Note. Radio Transmitting Set AN/FRT-22A is similar to Radio Transmitting Set AN/FRT-22. Information in this manual applies to both sets unless otherwise specified.

Paragraph 1. (As added by C 5, 27 Jul 59) Add the following after subparagraph *b*:

c. The AN/FRT-22A includes:

(1) Radio Transmitter T-454A/FRT-26.
(2) Radio Frequency Amplifier AM-738A/FRT-22.
(3) Power Supply PP-1970/FRT-22A.
(4) Power Supply PP-454/FRT-5.
(5) Step-Up Power Transformer TF-197/FRT-22.
(6) Step-Up Power Transformer TF-196/FRT-26.
(7) Power Supply PP-1971/FRT-26B.
(8) Power Supply Control C-2447/FRT-26B.
(9) Power Supply Control C-2446/FRT-22A.
(10) Frequency-Shift Keyer KY-45/FRT-5.
(11) Radio Frequency Oscillator O-270/FRT-26.
(12) Radio Frequency Oscillator O-243A/FRT-24.
(13) Radio Transmitting Set AN/FRT-26B.

(As added by C 8, 12 Sep 63) Add paragraph 1.1 after paragraph 1.

1.1. Index of Publications

Refer to the latest issue of DA Pam 310-4 to determine whether there are new editions, changes, or additional publications pertaining to this equipment. DA Pam 310-4 is a current index of technical manuals, technical bulletins, supply manuals (types 7, 8, and 9), supply bulletins, lubrication orders, and modification work orders that are available through publications supply channels. The index lists the individual parts (-10, -20, -35P, etc.) and the latest changes and revisions of each equipment publication.

Delete paragraph 2 (page 1 of C 9) and substitute:

2. Forms and Records

a. Reports of Maintenance and Unsatisfactory Equipment. Use equipment forms and records in accordance with instructions in TM 38-750.

b. Report of Damaged or Improper Shipment. Fill out and forward DD Form 6 (Report of Damaged or Improper Shipment) as prescribed in AR 700-58 (Army), NAVSANDA Publication 378 (Navy), and AFR 71-4 (Air Force).

c. Reporting of Equipment Manual Improvements. The direct reporting by the individual user of errors, omissions, and recommendations for improving this manual is authorized and encouraged. DA Form 2028 (Recommended Changes to DA Publications) will be used for reporting these improvements. This form will be completed using pencil, pen, or typewriter and forwarded direct to

*This change supersedes C 3, 4 September 1957; C 5, 27 July 1959; C 6, 28 October 1960; and C 8, 12 September 1963.

EMFO LIBRARY

Commanding General, U.S. Army Electronics Command, ATTN: AMSEL-MR-(NMP)-MA, Fort Monmouth, N.J. 07703.

8.2. Differences in Models (AN/FRT–22A)

Note. Certain nomenclatures are changed as shown in chart below.

AN/FRT–22	AN/FRT–22A	Differences
Radio Transmitter T–454–A/FRT–26 and RF Amplifier AM–738/FRT–22.	Radio Transmitter T–454A/FRT–26 and Radio Frequency Amplifier AM–738A/FRT–22.	Control circuit modifications prevent putting Radio Transmitter T–454A/FRT–26 in operate condition with Radio Frequency Amplifier AM–738/FRT–22 in plate-off condition.
Power Supply Assembly PP–1089/FRT–22.	Power Supply PP–1970/FRT–22A.	PP–1970/FRT–22A has reactors and arc-back indicators added to high-voltage rectifier circuits to increase tube life. The LINE VOLTAGE meter circuit is modified so that the meter indicates the unregulated input line voltage rather than the regulated line voltage. Power Supply Assembly PP–1089/FRT–22 and Power Supply PP–1970/FRT–22A are modified to reduce surge current when the equipment is energized during single-sideband operation. For modification data, refer to MWO 11–5820–280–30/1.
Power Supply Assembly PP–1088/FRT–26.	Power Supply PP–1971/FRT–26B.	PP–1971/FRT–26B has relays that open the K401A circuit to prevent damage to K401A from possible overheating. Control circuit modifications in the TUNE-OPERATE circuit permit switching between the L.V. TUNE position and the H.V. TUNE position as well as between the OPERATE position and the H.V. TUNE position without pressing the PLATE OFF switch first. Modifications in the automatic restart control circuit cause the circuit to function during single-sideband operation the same as it does during am and cw operation. Prior to the modification, a simulated overload occurred on single-sideband operation when changing from one preset channel to another. This simulated overload operates the restart cycle counter and bypasses the nonautomatic restart interval timer.
Power Supply Control C–1402/FRT–26.	Power Supply Control C–2447/FRT–26B.	C–2447/FRT–26B omits the snap-action switches from the motor-operated circuit breakers to prevent the circuit breakers from stopping in the reset position.
Radio Transmitter T–454/FRT–26.	Radio Transmitter T–454A/FRT–26.	The single-sideband input circuit is modified to incorporate a new type balun.

Page 14, paragraph 11*b*. (As changed by C 3, 4 Sep 57)

Add the following at the end of subparagraph (3): The condition of arcing and heating between the plate tank coils and the voltmeter of the pa can be substantially eliminated if, during installation of the vacuum capacitors, the outside element of the capacitors is connected to ground or to a low potential side of the circuit. The settings of the variable vacuum capacitors are very critical. A Q-meter should be used to set the capacitors.

Page 20, figure 20. (As added by C 3, 4 Sep 57) Add the following note:

Note. IN RADIO SETS MODIFIED BY MWO SIG 192, TWO TRANSPARENT LUCITE SAFETY SHIELDS (15 INCHES BY 36 INCHES) ARE MOUNTED ON THE IPA AND PA UNITS. THESE PROTECT THE OPERATOR FROM DANGER OF SHOCK AND BURNS FROM ANTENNA CURRENT METERS.

Page 25, figure 24. (As changed by C 5, 27 Jul 59) Change the directive to: For Radio Transmitting Set AN/FRT–22A, make the following wiring changes:

Page 48, paragraph 20. (As changed by C 8, 12 Sep 63)

Delete and substitute:

20. Tuning Procedure for Single-Sideband Operation

Note. In radio sets modified by MWO 11–5820–448–30/1, an antenna changeover relay is mounted on the top of Radio Frequency Amplifier AM–738/FRT–22 when used with Radio Transmitter T–265/FRC–10 or T–409/FRC–30 for ssb operation. The antenna changeover relay automatically switches the RF output of either the driver transmitter only

or the combined output of the driver-amplifier transmitters into the transmitting antenna.

With the single-sideband (ssb) modification complete (para 34) and the input coaxial cables connected to the output of a suitable driver transmitter, such as Radio Transmitters T–265/FRC–10 and T–409/FRC–30, the following tuning and setup procedure should be followed. Refer to the tuning charts (figs. 42–49) for initial settings of tuning controls for the frequencies to be used. (The first and second multiplier controls are not used for single-sideband operation.)

a. Connect the output of the single-sideband equipment that is to be used to drive the AN/FRT–22 transmitter to one of the ssb inputs in the ipa unit. These input jacks are located on the rear wall of the grid inclosure and can be reached through the rear doors of the ipa bay. Check to see that input plug P532 is seated in the proper position in socket J532 inside the grid inclosure. These can be reached from the front of the transmitter by removing the front cover plate from the grid inclosure. Figure 183 shows the location of P532 and J532. If a 52-ohm unbalanced source is used to drive the transmitter, the plug must be inserted in the front position; if a 200-ohm balanced source is to be used, it must be inserted in the rear pair of contacts.

b. Operate circuit breakers SERVO CONTROL (S306), CONTROL CIRCUIT S303, L.V. AND BIAS (S302), LOW LEVEL FILAMENT (S304), P.A. FILAMENT (S305), and BLOWER (S301) on Power Supply Assembly PP–1088/FRT–26 to the ON position. Operate the circuit breakers SERVO CONTROL (S1607), CONTROL CIRCUIT (S1603), BIAS (S1602, RECT. FILAMENT (S1604), P.A. FILAMENT (S1605), and the BLOWER (S1601) on Power Supply Assembly PP–1089/FRT–22 to the ON position.

c. Operate the FILAMENT-EMERGENCY SHUTDOWN switches on all four cabinets to the ON position.

d. Turn the TUNE-OPERATE switch to the L.V. TUNE position.

e. Set the channel selector switch to the desired position.

f. Refer to the calibration curves (figs. 42–49) and set up controls C, D, F, and G on the preset tuning control panel strip for the channel selected on Radio Transmitter T–454/FRT–26. Set up controls H and M on the preset tuning control panel strip, corresponding on RF Amplifier AM–738/FRT–22, to the settings indicated by the curves. Settings for controls I and J on the preset tuning control panel strip of RF Amplifier AM–738/FRT–22 will depend on the nature of the load presented to the transmitter by the transmission line.

g. Move the IPA POWER AMP. LOADING control E and the PA LOADING control I both to zero.

h. Set the KEYING SELECTOR switch (S501) to the LOCAL position.

i. Turn the EXCITATION SELECTOR switch (S527) to the 1-SWR position.

j. With the ssb exciter, apply a two-tone, suppressed carrier input (1,000 and 1,575 cps with carrier 20 db below either tone) of such magnitude that an indication in the order of $\frac{1}{10}$ to $\frac{3}{10}$ full scale appears on EXCITER TEST NO. 1 meter M505.

k. Resonate the single-sideband input circuit by tuning DRIVER PLATE control C to produce a minimum SWR as indicated by a minimum reading on EXCITER TEST NO. 1 meter.

l. Turn the TUNE-OPERATE switch to the H.V. TUNE position.

m. Depress either the ipa or the ipa power supply PLATE ON pushbutton (S519 or S309).

n. Tune IPA POWER AMP. PLATE control D to give a dip indication on TOTAL P.A. PLATE current meter M502.

o. Increase IPA POWER AMP. LOADING control E to the point where TOTAL P.A. PLATE current meter M502 indicates a slight increase in plate current.

p. Tune IPA ANT. TUNING control F to give a peak indication on TOTAL P.A. PLATE current meter M502.

q. Set R.F. TEST switch S1502 to the L. or R. GRID RF PEAK position.

r. In turn, increase IPA POWER AMP. LOADING control E, tune IPA POWER AMP. PLATE control D to give a dip indication on TOTAL P.A. PLATE current meter M502, and tune IPA ANT. TUNING control F to give a peak indication on TOTAL P.A. PLATE current meter N502. Repeat the procedures until RF TEST meter M1504 gives a slight indication of RF voltage at the grids of the power amplifier.

s. Increase IPA POWER AMP. LOADING control E until PA TOTAL GRID CURRENT meter M1503 indicates 1.5 amperes.

t. Depress either the pa or the pa power supply PLATE ON pushbutton (S1508 or S1609), and immediately tune PA PLATE TUNING control H to give a dip indication on PA TOTAL PLATE CURRENT meter M1501.

u. Increase PA LOADING control I to the point where TOTAL PLATE CURRENT meter M1501 indicates a slight increase in plate current.

v. Tune the PA ANTENNA TUNING control J to give a peak indication on TOTAL PLATE CURRENT meter M1501.

w. Turn the TUNE-OPERATE switch to the OPERATE position.

x. Turn EXCITATION SELECTOR switch S527 to the SSB position and EXCITER TEST switch S503 to either the R. or L. GRID RF PEAK position so that EXCITER TEST NO. 1 meter M505 indicates ipa grid RF peak voltage.

y. Increase the output of the ssb exciter to 100 volts RF peak voltage at the ipa grids as indicated by EXCITER TEST NO. 1 meter M505. When increasing the excitation level, decrease IPA POWER AMP. LOADING control E, if necessary, to keep the ipa plate current under 5 amperes as indicated by TOTAL P.A. PLATE current meter M502. Decrease PA LOADING control I, if necessary, to keep the pa plate current under 13 amperes as indicated by TOTAL PLATE CURRENT meter M1501.

Note. During tuning, a plate current overload may cause a shutdown and remove plate voltage. To reapply plate voltage, return the TUNE-OPERATE switch to the H. V. TUNE position, reduce the loading, and then depress the PLATE ON pushbuttons.

z. In turn, increase IPA POWER AMP. LOADING control E, tune IPA POWER AMP. PLATE control D to give a dip indication on TOTAL P.A. PLATE current meter M502, and tune IPA ANT. TUNING control F to give a peak indication on TOTAL P.A. PLATE current meter M502; be sure that the grid drive to the pa is always indicated by TOTAL GRID CURRENT meter M1503. After increasing the ipa output, sequentially increase PA LOADING control I, tune PA PLATE TUNING control H to give a dip indication on TOTAL PLATE CURRENT meter M1501, and tune PA ANTENNA TUNING control J to give a peak indication on TOTAL PLATE CURRENT meter M1501. Repeat this process of first increasing the output and tuning the ipa and then increasing the output and tuning the pa until final adjustment shows 0.15 ampere TOTAL GRID CURRENT on pa meter M1503 and 6 amperes TOTAL PLATE CURRENT on pa meter M1501. (Corresponding values with single-tone excitation are approximately 0.5 ampere total grid current and 5 amperes total plate current.) The ipa tuning procedure should terminate with POWER AMP. PLATE control D, and the pa tuning procedure should terminate with PLATE TUNING control H. While tuning, IPA TOTAL P.A. PLATE current meter M502 must indicate less than 5 amperes and PA TOTAL PLATE CURRENT meter M1501 must indicate less than 13 amperes to prevent an overload.

aa. After final tuning, increase the pa plate voltage to 5,000 volts with P.A. PLATE VOLTAGE control S1622. Reduce PA LOADING control I to obtain 6 amperes TOTAL PLATE CURRENT on meter M1501.

ab. To minimize distortion, maintain a ratio between 1:15 and 1:20 between the RF drive to the ipa grid and the ipa RF plate voltage. To do this, adjust the output level of the ssb exciter and adjust PA INPUT CAPACITY control M while using IPA POWER AMP. LOADING control E to maintain 0.15 ampere TOTAL GRID CURRENT on PA meter M1503. EXCITER TEST NO. 1 meter M505 indicates RF drive to the ipa grid when EXCITATION SELECTOR switch S527 is in the SSB position and EXCITER TEST switch S503 is in either the R. or L. GRID RF PEAK and PLATE RF PEAK position, the fourth or fifth position. EXCITER TEST NO. 2 meter M506 indicates ipa RF plate voltage with EXCITER TEST switch S503 in the same position. With an RF grid drive of 100 volts (*y* above), the ipa RF plate voltage should be adjusted between 1,500 and 2,000 volts. Less than 100-volt RF grid drive requires that the ipa RF plate voltage be adjusted between 15 and 20 times the RF grid drive. When properly excited, properly tuned, and working into an appropriate load, the radio transmitter will deliver 15 kw of RF power.

(As added by C 6, 28 Oct 60) Add paragraphs 20.1, 20.2, and 20.3 after paragraph 20.

20.1. Tuning Procedure for Single-Sideband Operation of Transmitters Modified by MWO 11–5800–200–30/3

Transmitters modified by MWO 11–5800–200–30/3 can be operated in single-sideband operation with a low-level input of 0.1 watt as provided by Modulator-Oscillator Group OA–2180/FRT–51.

a. Perform the single sideband modification procedures in paragraph 34.1.

b. Operate circuit breakers SERVO CONTROL (S306), CONTROL CIRCUIT (S303), L.V. AND BIAS (S302), LOW LEVEL FILAMENT (S304), P.A. FILAMENT (S305), and BLOWER (S301) on Power Supply Assembly PP–1088/FRT–26 to the ON position. Operate circuit breakers SERVO

CONTROL (S1607), CONTROL CIRCUIT (S1603), BIAS (S1602), RECT. FILAMENT (S1604), P.A. FILAMENT (S1605), and BLOWER (S1601) on Power Supply Assembly PP–1089/FRT–22 to the ON position.

c. Set the FILAMENT-EMERGENCY SHUT DOWN switches on all four cabinets to the ON position.

d. Turn the TUNE-OPERATE switch to the L.V. TUNE position.

e. Set the channel selector switch to the desired position.

f. Refer to the calibration curves (figs. 42–49) and set up controls C, D, E, F, and G on the preset tuning control panel strip for the channel selected on Radio Transmitter T–454/FRT–26. Set up controls H and M on the preset tuning control panel strip on RF Amplifier AM–738/FRT–22 to the setting indicated by the curves. Settings for controls I and J on the preset tuning control panel strip of RF Amplifier AM–738/FRT–22 depend on the nature of the load presented to the transmitter by the transmission line.

g. Operate any one of the four TEST KEYS to the upper locking position.

h. Set EXCITATION SELECTOR switch S527 to the SSB position.

i. Set KEYING SELECTOR switch S501 to the LOCAL position.

j. Press either the pa or pa power supply bay PLATE ON pushbutton (S1508 or S1609).

k. Turn the TUNE-OPERATE switch to the H.V. TUNE position.

l. Set the EXCITER TEST switch (S503) to the 2ND MULT. CATHODE position.

m. Adjust the R.F. EXCITATION potentiometer for a 40-milliampere reading on EXCITER TEST NO. 1 meter (fig. 31).

n. Adjust SSB DRIVER BIAS ADJ R672 for a 90-milliampere reading on DRIVER CATHODE meter M501.

o. Adjust IPA BIAS control R302 (fig. 52) for a 0.8-ampere reading on ipa TOTAL P.A. PLATE meter M502 (fig. 31).

p. Adjust P.A. BIAS control R1638 (fig. 53) for a 2.4-ampere reading on TOTAL PLATE CURRENT meter M1501 (fig. 34).

q. Set the TUNE-OPERATE switch to the L.V. TUNE position.

r. Press the ipa or pa power supply PLATE ON switches.

s. Turn the EXCITER TEST switch to position 4 (labeled L.P.A. GRID R.F. PEAK—1,000V—L.P.A. PLATE R.F. PEAK—10 KV).

t. Apply a single-tone signal between ½ and 1 volt from the OA–2180/FRT–51 ssb exciter. (Measure this voltage with Voltmeter, Electronic ME–30B/U connected to SPARE jack J1208 on the patch panel (fig. 18).)

u. Tune the second MULTIPLIER PLATE TUNING potentiometer (fig. 33) to resonance by adjusting for maximum indication on the DRIVER CATHODE current meter. (This may show only a slight increase of cathode current.)

v. Tune DRIVER PLATE control C to resonance by adjusting for maximum reading on EXCITER TEST NO. 1 meter. Readjust the ssb exciter unit to give a 20- to 40-volt reading on EXCITER TEST NO. 1 meter.

w. Turn P.A. TEST switch S504 to the TOTAL P.A. GRID position.

x. Turn the TUNE-OPERATE switch to the H.V. TUNE position.

Note. As soon as the TUNE-OPERATE switch is turned to the H.V. TUNE position, adjust the POWER AMP. PLATE control on the T–454/FRT–26 for minimum plate current as indicated on TOTAL P.A. PLATE meter M502.

y. Increase ssb excitation for a 100-volt RF peak at the ipa grids, as indicated on EXCITER TEST NO. 1 meter.

z. Readjust the DRIVER PLATE TUNING control for maximum RF peak voltage at the ipa grids, as indicated on EXCITER TEST NO. 1 meter.

aa. Operate intermediate power amplifier ANT. TUNING control F until a noticeable increase in the indication on the intermediate P.A. PLATE current meter occurs. At the same time, readjust POWER AMP. PLATE control D for minimum plate current.

***Caution:* During this procedure, watch the TOTAL GRID CURRENT meter on RF Amplifier AM–738/FRT–22. *Do not let the current exceed 2.5 amperes.* Adjust intermediate POWER AMP. LOADING control E as necessary to limit the pa grid current.**

ab. Press PLATE ON button S1508 or S1609 and immediately adjust PLATE TUNING control H for minimum reading on the TOTAL PLATE CURRENT meter. Keep the dial setting close to that shown on the tuning chart as there may be one or more false resonance at this stage of tuneup.

ac. Vary ANTENNA TUNING control J for maximum indication on the TOTAL PLATE

CURRENT meter and readjust PLATE TUNING control H for minimum indication. Repeat this procedure for optimum tuning.

ad. Turn the TUNE-OPERATE switch to the OPERATE position.

ae. Adjust intermediate POWER AMP. LOADING control E so that the ratio between ipa RF peak plate voltage and ipa RF peak grid voltage is approximately 13 to 1; for example, if the peak RF grid voltage is 100 volts, adjust the loading to the point where the peak RF plate voltage is 1.3 kv. Once this ratio is set, do not change the ipa loading.

af. Adjust the ssb exciter output for a 0.5-ampere reading on TOTAL GRID CURRENT meter M1503 on RF Amplifier AM–738/FRT–22.

ag. Adjust LOADING control I for an 8-ampere reading on TOTAL PLATE CURRENT meter M1501.

ah. Repeat the instructions in *af* and *ag* above until maximum accuracy is obtained.

ai. Recheck pa plate voltage and, if necessary, adjust to 5,000 volts.

aj. If the load presented to the transmitter by the transmission line is lower than 600 ohms, and the operating frequency is 4,000 kc or slightly higher, it may not be possible to increase the loading enough to obtain the 8-ampere plate current. If so, insert either the 100-$\mu\mu$f or the 250-$\mu\mu$f fixed vacuum capacitor (labeled C1587 and shown in dummy mounting clips fig. 203) into clips designated C1587 (fig. 211). Repeat the procedures in *ag* and *ah* above. If the 8-ampere current is not obtained, try the other vacuum capacitor and repeat the procedures in *ag* and *ah* above.

ak. Recheck all tuning controls to make certain that all adjustments are as nearly perfect as possible. Make only small movements of the controls at this time; some controls are sensitive to adjustment. If the PLATE TUNING control is shifted too far, pa plate current will rise to a sufficiently high value to trip one of the pa overloads. If this happens, set the TUNE-OPERATE switch to H.V. TUNE and turn on the high voltage again. Carefully adjust the PLATE TUNING control for minimum pa plate current and return the TUNE-OPERATE control to the OPERATE position.

al. With the transmitter tuned and loaded as indicated, remove the single-tone excitation and proceed with single-sideband transmission.

20.2. Automatic Load Control Adjustment

a. Automatic load control (alc) is possible on transmitters modified by MWO 11–5800–200–30/3 and driven by Modulator-Oscillator Group OA–2180/FRT–51. The alc chassis is located on the front of vacuum-tube voltmeter compartment Z516 (installed in accordance with the MWO).

b. Adjust potentiometer R1326 (alc control) as follows:

(1) Connect an RF vtvm (such as Electronic Voltmeter ME–30B/U) between terminal 2 of J3805 and ground in the main junction box of the OA–2180/FRT–51. Use the 3-volt scale.

(2) Tune the transmitter (para 20.1) and load to approximately 5 amperes of total plate current.

(3) Adjust R1326 in the alc control box for an approximate 1-volt reading on the voltmeter. This adjustment should be approximately 70–80 on the dial of the alc knob.

Note. This adjustment can vary, depending on the frequency and type of signal transmitted. The adjustment should be made with the actual signal used.

20.3. Automatic Gain Control Adjustment

Transmitters modified by MWO 11–5800–200–30/3 and driven by Modulator-Oscillator Group OA–2180/FRT–22 can exercise automatic gain control (agc) of the OA–2180/FRT–51. To obtain operation from the transmitter potentiometer (R671, installed by the MWO) similar to that of the internal potentiometer of the OA–2180/FRT–51, make the following adjustment:

a. In the tsb modulator of the OA–2180/FRT–51, set internal agc control R4513 to 10.

b. On the exciter-monitor of the OA–2180/FRT–51, set the METER SWITCH to read monitor signal level current; set the MONITOR INPUT switch to the EXCITER OUTPUT position (fig. 10, TM 11–5821–212–10). Adjust the MONITOR LEVEL for a 0 reading on the meter.

c. In the tsb modulator drawer, remove connector plug P4013 from its jack. Connect the MWO-installed, microphone-type cable from the transmitter to P4013. The other end of this cable connects to J535 on the MWO-installed connector box assembly on the rear of the swinging rack in the ipa bay.

d. Set the transmitter input amplifier servomotor control (R651, fig. 33) to the 10 position.

e. Disconnect the shaft of potentiometer R671 (installed by MOW) from the driving gear mechanism either by loosening the setscrews or by loosening the mounting bracket to disengage the gear. Adjust

R671 by hand until the monitor meter on the tsb modulator unit (*b* above) again reads 0.

f. Reconnect the shaft of R671 to the driving mechanism; tighten the setscrews on the mounting bracket.

Page 66, paragraph 31*a*(3)(*a*). (As added by C 3, 4 Sep 57) At the end of subparagraph (*a*), add Check the arrow on the two blowers (B501 and B1501) for an indication of proper direction of airflow. Improper installation of the blower unit will result in severe damage to the ipa tubes.

Page 67, figure 52. (As changed by C 3, 4 Sep 57) Change callout "P.A. BIAS" to IPA BIAS.

Page 72, paragraph 31*b*(2)(*e*). (As changed by C 3, 4 Sep 57) At the beginning of subparagraph (*e*), add Examine circuit breaker K1607 to see whether a magnet is present. If a magnet is found, remove it.

Page 76, paragraph 34. (As changed by C 3, 4 Sep 57) Make the following changes:

Subparagraph *b*, line 1. After "E–1615," add (fig. 222).

Subparagraph *c*, line 2. After "clips," add (fig. 54).

Subparagraph *d*, line 1. After "switch," add (fig. 32).

Subparagraph *f*, line 2. After "R–302," add (fig. 52).

Subparagraph *g*, line 2. After "R–1638," add (fig. 53).

(As added By C 6, 28 Oct 60) Add paragraphs 34.1 and 34.2 after paragraph 34.

34.1. Modification for Linear Amplifier Operation for Single-Sideband Suppressed Carrier Use on Transmitters Modified by MWO 11–5800–200–30/3

a. Make the following connections between the modified transmitter and Modulator-Oscillator Group OA–2180/FRT–51:

(1) RG–58C/U cable from rear of SPARE jack J1208 (fig. 18) to EXC RF OUT jack (J3809 (fig. 39) TM 11–5821–212–20) at the rear of the junction box.

(2) RG–58C/U cable from terminals 2 and 3 of P3805 in the modulator-oscillator junction box to J1301 on the bottom of the alc assembly (added to vacuum-tube voltmeter compartment Z516 by the MWO).

(3) Microphone cable between P4013 in the tsb modulator chassis of the OA–2180/FRT–51 and J535 on the connector box assembly (rear of the swinging rack in the ipa bay).

b. Swing out the frequency multiplier chassis and move CW–SSB switch S528 to the SSB position.

c. Reconnect R673 and L529 if they have been previously disconnected. (These components were installed in accordance with the MWO, but are disconnected in cw operation.)

d. Replace the frequency multiplier chassis.

e. Remove resistors R538 and R539 (fig. 187) in the back of the ipa bay. Replace with shorting links (fig. 185). Store the resistors in the dummy clips.

f. Change the primary taps on Power Transformer TF–196/FRT–26 so that the plate voltage, as indicated on P.A. PLATE VOLTAGE meter M301, is approximately 5,000.

g. Change pa grid-bias link E1615 (fig. 222) in Power Supply Assembly PP–1089/FRT–22 to the SSB position.

h. Place the two ipa grid input ssb links (E545.1 and E545.2) in their clips (fig. 54).

i. Follow the tuning procedure of paragraph 20.1 to put the set into operation.

34.2. Procedure for Converting Modified Transmitters From Ssb to Cw Operation

To operate a modified (MWO 11–5800–200–30/3) transmitter in the cw mode after it has been set up for ssb operation (para 34.1), proceed as follows:

a. Swing out the frequency multiplier chassis and move SSB–CW switch S528 to the CW position.

b. Disconnect R673 and L529 (installed in accordance with the MWO).

c. Replace the frequency multiplier chassis.

d. Set EXCITATION SELECTOR switch S527 to the CW position.

e. Remove the shorting links from the clips and reinsert resistors R538 and R539 as shown in figure 187. Store the shorting links in the dummy clips as shown in figure 185.

f. Change the pa grid-bias link (fig. 222) in Power Supply Assembly PP–1089/FRT–22 to the CW position.

g. Readjust the transmitter for normal cw operation (paras 15, 19, and 80).

Page 77, paragraph 36*d*. Make the following changes:

(As changed by C 6, 28 October 1960) Add the following after the last sentence: This tube puller is not long enough to reach the antenna coupler platform and no other fulcrum is available to which sufficient force to remove the IPA tubes can be

applied. Remove the tube by using an S-hook with a chain and a ring suspended from the antenna coupler platform which can then be used as a fulcrum. If an S-hook is not available, remove the tube by placing the clamp on the tube and pulling up on the web strap.

(As added by C 8, 12 September 1963) Delete paragraphs 38 through 42 and figures 56 and 57 and substitute:

38. Scope of Organizational Maintenance

The maintenance duties assigned to organizational maintenance personnel of the transmitters are listed below with a reference to the paragraphs covering the specific maintenance function.

a. Monthly preventive maintenance checks and services chart (para 41).

b. Lubrication (para 43).

c. Touchup painting (para 47).

d. Troubleshooting (paras 48 through 51).

39. Preventive Maintenance

a. Preventive maintenance is the systematic care, inspection, and servicing of equipment to maintain it in serviceable condition, prevent breakdowns, and assure maximum operational capability. Preventive maintenance is the responsibility of all categories concerned with the equipment and includes the inspection, testing, and repair or replacement of parts, subassemblies, or units that inspection reveals and tests indicate would probably fail before the next scheduled periodic service. Preventive maintenance checks of the transmitters at the second echelon level are made at monthly intervals unless otherwise directed by the commanding officer. The preventive maintenance checks and services should be scheduled concurrently with the periodic schedule of the other equipment in the communication system.

b. Maintenance forms and records to be used and maintained on this equipment are specified in TM 38–750.

40. Monthly Maintenance

Perform the maintenance functions indicated in the monthly preventive maintenance checks and services chart (para 41) once each month. A month is defined as approximately 30 calendar days of 8-hour-per-day operation. If the equipment is operated 16 hours a day, the monthly preventive maintenance checks and services should be performed at 15-day intervals. Adjustment of the maintenance intervals must be made to compensate for any unusual operating conditions. Equipment maintained in a standby (ready for immediate operation) condition must have monthly preventive maintenance checks and services performed on it. Record all deficiencies or shortcomings in accordance with the requirements of TM 38–750.

41. Monthly Preventive Maintenance Checks and Services Chart

Note. Perform the monthly preventive maintenance checks and services chart items *only* during an *authorized* downtime when the equipment is part of a radio communications system.

Sequence No.	Item	Procedure	References
1	End item equipment	Check equipment for completeness	Para 6.
2	Equipment interior and exterior.	Check for cleanliness. Clean with lint-free cloth or brush as required.	Figs. 1 and 20, and para 42.
3	Modifications	Check to see if applicable MWO's have been performed. All URGENT MWO's must be applied immediately and all NORMAL MWO's must be scheduled.	DA Pam 310–4.
4	Running spares	Make sure that authorized quantities of running spares are on hand or requisition.	Para 7, appx IV.
5	Exterior handles, doors, latches, and hinges.	Check for looseness, binding, breakage, or other damages. Tighten as necessary.	Fig. 20.
6	Blower motors	Check for signs of damage due to wear, overheating, and other damages.	Figs. 186, 201, 205, and 217.
7	Fuses	See that all operating fuses are of proper value	Para 7.
8	Accessible pluckout parts	Check for improper seating of pluckout parts; tighten mountings as necessary.	Figs. 144, 147, 154, 156, 158 and 159.
9	Panels, mountings, and brackets.	Check and tighten mounting bolts, screws, and nuts as necessary.	Fig. 20.
10	Circuit breakers, relays, components parts, and wiring.	Check for swelling, blistering, fractures, loose connections, and damaged insulation.	Figs. 144 through 231.

Sequence No.	Item	Procedure	References
11	Meters	Check for broken glass, sticking meter needle, loose mounting, and other damages. Adjust zero setting of meter needles.	Fig. 20.
12	Variable capacitors	Check for dirt, moisture, and loose mountings	Figs. 179, 180, 183, and 200.
13	Large capacitors	Check for oil leakage, electrolytic leakage, loose connections, dirt, and insecure mountings.	Figs. 144 through 231.
14	Gaskets	Check for leaks, breaks, and worn or loose parts	Fig. 20.
15	Lubrication	Lubricate equipment	Para 43.
16	Jacks and connectors	Check all jacks and connectors for proper seating and good contact.	Fig. 14.
17	Knobs, dials, and switches	While making operating checks (item 18) observe that mechanical action of knob, dial, and switch is smooth and free of external and internal binding.	Figs. 2 through 5 and 20.
18	Operation	Check equipment for normal operation	Para 51.

42. Cleaning

Inspect the exterior of the equipment. The exterior surfaces should be free of dust, dirt, grease, and fungus.

Warning: **Cleaning Compound (FSN 7930–395–9542) is flammable and its fumes are toxic. Provide adequate ventilation.** ***Do not*** **use near a flame.**

a. Remove grease, fungus, and ground-in dirt with a clean, soft cloth. If necessary, dampen (not wet) the cloth with cleaning compound and then wipe the parts with a clean lint-free cloth.

b. Remove dust or dirt from plugs and jacks with a brush.

c. Clean the front panels and control knobs; use a soft lint-free cloth. If dirt is difficult to remove, use mild soap and water.

Page 82, paragraph 43*b*. (As changed by C 3, 4 Sep 57)

Delete © and substitute:

© Graphite lubricant dgf–123, dry graphite film lubricant or equivalent. This lubricant is a colloidal dispersion of synthetic graphite in a nonflammable volatile carrier. If dgf-123 or an equivalent is unavailable, dry powdered graphite lubricant may be used. Apply a coating of lubricant sparingly with a brush or spray gun to all rubbing surfaces indicated. In the case of the drums upon which the high-voltage contacts ride, remove the drums from the equipment, then apply a thin even coating of the lubricant with as little overlapping or spottiness as possible. When a spray gun is used, it should be held from 6 to 8 inches from the surface to be lubricated and moved at a constant rate and in a straight line, rather than in an arc. If the drum is rotated while being lubricated, the rate of movement should be constant and the distance from the nozzle of the gun and the drum surface should be the same at all times. Points requiring lubrication should be checked every 2 weeks. Where evidence of excessive lubrication or piling up of graphite appears, the friction surfaces should be thoroughly cleaned with cleaning compound and a lint-free cloth. A cloth of similar characteristics should be used to dry the surfaces before applying a new coating of lubricant. Graphite lubricant should not be sprayed on hardware, insulating materials, parts or surfaces other than those requiring lubrication. A graphite coating on insulating materials provides an electrical conducting path which may cause arcing or short circuiting.

Page 99, paragraph 47. (As changed by C 8, 12 Sep 63)

Delete and substitute:

47. Touchup Painting

Remove rust and corrosion from surfaces by lightly sanding them with fine sandpaper. Brush two thin coats of paint on the bare metal to protect it from further corrosion. Refer to applicable cleaning and refinishing practices specified in TB SIG 364 and TM 9–213.

Page 148 (page 1 of C 4). Make the following changes:

Figure 115. Make the following changes:

Interchange reference symbols L523 and L524.

Delete the dot that indicates a connection between the lower end of C594 and ground.

Paragraph 54*b*(5)(*a*). (As changed by C 5, 27 Jul 59) Delete the last sentence and substitute:

Radio Transmitter T–454A/FRT–26 does not have a balanced 200-ohm input circuit.

Page 176, paragraph 56*d*. (As changed by C 5, 27 Jul 59) Delete the note and substitute:

Note. Reactors and arc-back indicators are added to high-voltage rectifier circuits of Power Supply PP–1970/FRT–22A. Refer to figure 266.3.

Page 177, figure 128. Add the following note:

Note. REFER TO FIGURE 6 IN MWO 11–5820–280–30/1 FOR SCHEMATIC DIAGRAM CHANGES.

Page 183, paragraph 57*a*(2) (As changed by C 5, 27 Jul 59) Make the following changes:

Subparagraph (*e*), first column, ninth line from bottom.

Delete "On all equipments other than those procured on Order No. 50000-Phila-57" and substitute: In Radio Transmitting Set AN/FRT–22.

Subparagraph (*g*), first column, line 1. Delete "For equipment procured on Order No. 50000-Phila-57" and substitute: In Power Supply PP–1971/FRT–26B.

Page 185, paragraph 57*b*(3) (As changed by C 5, 27 Jul 59) Make the following changes:

Subparagraph (*h*). Delete the note and substitute:

Note. Subparagraph (*i*) below and its note do not apply to Power Supply PP–1970/FRT–22A.

Subparagraph (*i.1*) line 2. Delete "equipment procured on Order No. 50000-Phila-57" and substitute: Power Supply PP–1970/FRT–22A.

Page 237, paragraph 69. (As changed by C 5, 27 Jul 57) Add subparagraphs *j.1* and *j.2* after subparagraph *j*:

j.1. Alignment of Antenna-Capacitor Shorting Switch.

(1) When switch S525 (fig. 33) is in the OFF position and the shorting-switch drive unit (motor B503) stops, the indicator on the motor housing (fig. 16) indicates OFF. At the same time, the antenna-capacitor shorting switch should be open.

(2) If the switch is not open, loosen the clamp on the motor flexible coupler and release the shaft that connects to the shorting switch. Rotate the shaft manually until the switch is at its maximum open position. Adjust the cam on the motor shaft until the loading spring is almost at its maximum tension when the switch is at the maximum open position.

(3) Reconnect the coupler to the motor shaft and operate switch S525 in all three positions. Observe the shorting switch and readjust the cam, if necessary, to provide minimum overtravel when the shorting switch is open.

j.2. Adjustment of Arc Gaps. If the gaps do not agree with those given in chart below, loosen the locknut on each screw and adjust each screw for the proper gap. Tighten the locknuts. The arc gaps in the IPA and PA circuits should be as follows:

Circuits	Inches
IPA antenna network, front	$\frac{1}{8} \pm \frac{1}{32}$
IPA antenna network, rear	$\frac{7}{16} \pm \frac{1}{16}$
IPA antenna network, slider rails	$\frac{3}{32} \pm \frac{1}{32}$
PA cathode capacitor	$\frac{1}{32} \pm \frac{1}{64}$
PA antenna network, front	$\frac{11}{16} \pm \frac{1}{16}$
PA antenna network, rear	$\frac{3}{8} \pm \frac{1}{16}$

Page 238, paragraph 69. (As changed by C 6, 28 Oct 60) Delete subparagraph *m* and substitute:

m. Adjustment of Electronic Keyer.

(1) Connect an external voltmeter to the slider terminal of TEST KEYING LEVEL control R568, so the polarity is negative with respect to ground.

(2) Rotate KEYING INPUT LEVEL control R548 and OUTPUT LEVEL control R560 fully clockwise and set KEYING INPUT FOR MARK control S502 to NEGATIVE. TEST KEY S316 or S521 should be in the closed (up) position.

(3) Set the TUNE-OPERATE switch to L.V. TUNE and press PLATE ON button S519. Set KEYING SELECTOR switch S501 to LOCAL.

(4) Adjust TEST KEYING LEVEL control R568 to obtain a reading on the Voltmeter of approximately −36 volts dc with respect to ground.

(5) Reverse the leads of the external voltmeter and set KEYING INPUT FOR MARK control S502 to POSITIVE. The voltmeter should read approximately +29 volts dc with respect to ground.

(6) Open the TEST KEY, set KEYING INPUT FOR MARK control S502 to POLAR NEGATIVE, and note the voltmeter reading. It should read approximately +37 volts dc, with respect to ground.

(7) Close the TEST KEY, reverse the external voltmeter leads, and note the reading.

This reading should be approximately −37 volts dc with respect to ground.

(8) If the voltages are not equal, repeat the instructions in (6) and (7) above; simultaneously adjust ADJ. C R573 until the two readings are nearly equal.

(9) With the voltmeter connected positive with respect to ground, set the KEYING INPUT FOR MARK control to POLAR POSITIVE. Note the voltmeter reading with the TEST KEY open. It should read approximately −43 volts dc with respect to ground.

(10) Reverse the voltmeter leads, close to TEST KEY, and note the voltmeter reading. This reading should be positive with respect to ground, and approximately equal in magnitude to the reading obtained with the TEST KEY open ((9) above).

(11) If these voltages are not equal, repeat the instructions in (9) and (10) above; simultaneously adjust ADJ. B R570 until these two readings are nearly equal.

Page 283, figure 203. (As added by C 6, 28 October 1960) Add the following note:

Note. CAPACITORS CALLED OUT AS C1587 ARE SET IN DUMMY CLIPS. WHEN ONE IS USED, IT IS SET IN THE POSITION SHOWN IN FIGURE 211.

Page 292, figure 217.1. (As changed by C 5, 27 Jul 59) Delete the caption and substitute: *Relays added in Power Supply PP–1971/FRT–26B, rear view of lower cabinet section.*

Page 295, figure 221.1. (As changed by C 5, 27 Jul 59) Delete the caption and substitute: *Arc-back indicators added in Power Supply PP–1970/FRT–22A, rectifier compartment.*

Page 298, figure 224.1 (As changed by C 5, 27 Jul 59) Delete the caption and substitute: *Relays and reactors added in Power Supply PP–1970/FRT–22A, rear view of cabinet wall.*

Page 306, appendix I (page 1 of C 9). Add the following to the references in proper sequence:

DA Pam 310–4 Index of Technical Manuals, Technical Bulletins, Supply Manuals (types 7, 8, and 9), Supply Bulletins, Lubrication Orders and Modification Work Orders.

TB SIG 364 Field Instructions for Painting and Preserving Electronics Command Equipment.

TM 9–213 Painting Instructions for Field Use.

TM 38–750 Army Equipment Record Procedures.

Page 489, figure 255.1 (As changed by C 5, 27 Jul 59) Delete the caption and substitute: *Modified single-sideband input network for Radio Transmitter T–454A/FRT–26.*

Page 491, figure 256 (As changed by C 5, 27 Jul 59) Note, line 3.

Delete "EQUIPMENTS PROCURED ON ORDER NO. 50000–PHILA–57" and substitute: RADIO TRANSMITTER T–454A/FRT–26.

Pages 497 and 499, figures 259 and 260. (As changed by C 5, 27 Jul 59) Change the directive to: For Power Supply PP–1971/FRT–26B, make the following wiring changes:

Page 499, figure 260.1. (As changed by C 5, 27 Jul 59) Delete the caption and substitute: *Modified and added circuits of Power Supply PP–1971/FRT–26B.*

Page 501, figure 261 (As changed by C 5, 27 Jul 59) Make the following changes:

Change the directive to: For Power Supply PP–1970/FRT–22A, make the following changes:

Add the following:

Note. REFER TO MWO 11–5820–280–30/1 FOR WIRING CHANGES.

Page 503, figure 262 (As changed by C 5, 27 Jul 59) Make the following changes:

Change the directive to: For Power Supply PP–1970/FRT–22A, make the following changes:

Add the following:

Note. REFER TO MWO 11–5820–30/1 FOR CABLING CHANGES.

Figure 262.1 (As changed by C 5, 27 Jul 59) Delete the caption and substitute: *Modified and added circuits of Power Supply PP–1970/FRT–22A, cabling and wiring diagram.*

Figure 262.2 (As changed by C 5, 27 Jul 59) Delete the caption and substitute: *High-voltage rectifier plate circuits of Power Supply PP–1970/FRT–22A, showing wiring and cabling of arc-back indicators and reactors.*

Page 506, figure 264 (As changed by C 5, 27 Jul 59) Change the directive to: For Power Supply Control C–2447/FRT–26B, make the following wiring changes:

Page 507, figure 265 (As changed by C 5, 27 Jul 59) Change the directive to: For Power Supply Control C–2446/FRT–22A, make the following wiring changes:

Page 509, figure 266. Make the following changes: (As changed by C 5, 27 Jul 59) Change the directive to:

For Radio Transmitting Set AN/FRT–22A, make the following changes:

(As changed by C 3, 4 Sep 57) Delete the line that connects the lower side of C594 to ground.

(As changed by C 5, 27 Jul 59) Make the following changes:

Figure 266.1. Delete the caption and substitute: *Modified control circuit of control circuit breaker S303 of Power Supply PP–1971/FRT–26B.*

Figure 266.2. Delete the caption and substitute: *Modified control circuit of control circuit breaker S1603 of Power Supply PP–1970/FRT–22A.*

Figure 266.3. Delete the caption and substitute: *Modified high-voltage rectifier circuit of Power Supply PP–1970/FRT–22A.*

Figure 266.4. Delete the caption and substitute: *Modified single-sideband input circuit of Radio Transmitter T–454A/FRT–26.*

By Order of the Secretary of the Army:

HAROLD K. JOHNSON,
General, United States Army,
Chief of Staff.

Official:

J. C. LAMBERT,
Major General, United States Army,
The Adjutant General.

Distribution:

Active Army:

USASA (2)
CNGB (1)
CC-E (7)
Dir of Trans (1)
CofEngrs (1)
TSG (1)
CofSptS (1)
USACDCEA (1)
USACDCCBRA (1)
USACDCCEA (1)
USACDCCEA
Ft Huachuca (1)
USACDCOA (1)
USACDCQMA (1)
USACDCTA (1)
USACDCADA (1)
USACDCARMA (1)
USACDCAVNA (1)
USACDCARTYA (1)
USACDCSWA (1)
USAMC (5)
USCONARC (5)
ARADCOM (5)
ARADCOM Rgn (2)
OS Maj Comd (4)
LOGCOMD (2)
USAMICOM (4)
USASMC (2)
USASCC (4)
USAECOM (30)
USASPTCP (11)
MDW (1)
Armies (2)
Corps (2)
USAC (3)
11th Air Aslt Div (3)
Svc Colleges (2)
Br Svc Sch (2) except
USASCS (50)
USATC AD (2)
USATC Armor (2)
USATC Engr (2)
USATC Inf (2)
USASTC (2)
WRAMC (1)
Army Pic Cen (2)
USACDCEC (10)
Instl (2) except
Ft Monmouth (70)
Ft Hancock (4)
Ft Gordon (10)
Ft Huachuca (10)
WSMR (5)
Ft Carson (25)
Ft Knox (12)
Army Dep (2) except
LBAD (14)
SAAD (30)
TOAD (14)
FTWOAD (10)
LEAD (7)
SHAD (3)
NAAD (5)
SVAD (5)
CHAD (3)
ATAD (10)
GENDEP (OS) (2)
Sig Sec, GENDEP (OS) (5)
Sig Dep (12)
Sig Fld Maint Shops (2)
AMS (1)
USAERDAA (2)
USAERDAW (13)
USACRREL (2)
Units org under fol TOE's:
11–57 (2)
11–97 (2)
11–98 (2)
11–117 (2)
11–127 (2)
11–155 (2)
11–157 (2)
11–158 (2)
11–500 AA–AC (2)
11–587 (2)
11–592 (2)
11–597 (2)

NG: None.
USAR: None.
For explanation of abbreviations used, see AR 320–50.

☆ U.S. Government Printing Office: 1966—200510

-0-4 Eo 18 Oct 67
EMFO LIBRARY

RADIO TRANSMITTING SET AN/FRT-22

TM 11-847
TO 31R2-2FRT22-1
CHANGES No. 4

DEPARTMENTS OF THE ARMY
AND THE AIR FORCE
WASHINGTON 25, D. C., *6 February 1958*

TM 11-847/TO 31R2-2FRT22-1, 18 February 1955, is changed as indicated so that the manual also applies to Radio Transmitting Sets AN/FRT-22 procured on Order No. 50000-Phila-57:

Page 1, paragraph 2.

b. (Superseded) Fill out and forward DA Form 468 (Unsatisfactory Equipment Report) to Commanding Officer, U. S. Army Signal Equipment Support Agency, Fort Monmouth, New Jersey, as prescribed in AR 700-38.

Page 11 (page 1 of C 2).

8.2. Differences in Models (Order No. 50000-Phila-57)

(Added)

The following modifications are incorporated in Radio Transmitting Sets AN/FRT-22 procured on Order No. 50000-Phila-57.

a. Snap-action switches in motor-operated circuit breakers of Power Supply Control C-1402/FRT-26 and Power Control C-598/FRT-6 are removed. This prevents the circuit breakers from stopping in the handle-down or reset position. Thermal relays are added in the control circuits of these circuit breakers to prevent motor damage due to overheating if the breakers fail to latch.

b. Control circuit modifications in the TUNE-OPERATE SWITCH circuit permit switching back and forth between the L. V. TUNE position and the H. V. TUNE position, as well as between the OPERATE position and the H. V. TUNE position.

c. Control circuit modifications prevent putting Radio Transmitter T-454/FRT-26 in operate condition with RF Amplifier AM-738/FRT-22 in the plate-off condition.

d. Modifications in the automatic restart control circuit cause the circuit to function during single-sideband operation in the same manner as it does during AM and CW operation. Prior to the modification, a simulated overload occurred on single-sideband operation when changing from one preset channel frequency to another. This simulated overload would step the restart cycle counter and bypass the nonautomatic restart interval timer.

e. Reactors and arc-back indicators are added to high-voltage rectifier circuits of Power Supply Assembly PP-1089/FRT-22 to increase tube life.

f. The LINE VOLTAGE meter circuit is modified so that the meter indicates the unregulated input line voltage rather than the regulated line voltage.

g. The single-sideband input circuit is modified to incorporate a new type of balun.

Page 25, figure 24. For equipment procured on Order No. 50000-Phila-57 make the following wiring changes:

E302:
- Terminal 11. Delete E95 wire (designated as 2 and connected to E401-11).
- Terminal 12. Add E95 wire and designate it as 2 so that it shows as being terminated at E401-11.

E306:
- Terminal 82. Add E2 wire from E306-82 to E401-114.

S315:
- Terminal 1. Add terminal 2 opposite terminal 1. Add E93 wire from S315-2 to E1603-12.
- Terminal 3. Add terminal 4 opposite terminal 3. Add E95 wire from S315-4 to E1603-39.
- Terminal 5. Add terminal 6 opposite terminal 5. Add E96 wire from S315-6 to E1607-268.

Page 148, figure 115. Add the following to the caption: (See figure 266.4 for equipment procured on Order No. 50000-Phila-57).

Page 148, paragraph 54*b*(5)(*a*). After the last sentence add: Equipment procured on Order No. 50000-Phila-57 do not have a balanced 200-ohm input circuit.

EMFO LIBRARY

Page 176, paragraph 56*d*. Add the following note below the heading:

Note. Reactors and arc-back indicators are added to high-voltage rectifier circuits of equipments procured on Order No. 50000–Phila–57. Refer to figure 266.3.

Page 183, paragraph 57.

a(2)(*e*) ninth line from bottom, first column. Change the sentence beginning "If, however, the" to read: **On all equipments other than those procured on Order No. 50000–Phila–57, if the TUNE-OPERATE switch is in either the H. V. TUNE or OPERATE position and the undervoltage-release coils are still deenergized, the circuit-breaker starting motor will continue to run but still will not close the main contacts while the PLATE ON button is pressed.**

(*g*) (Added) For equipments procured on Order No. 50000–Phila–57 the manual TUNE-OPERATE switch S310 is a three-position switch and functions in the following manner: In the L. V. TUNE position, relay K328 is deenergized. This prevents the main circuit-breaker motor K401A from operating. In the H. V. TUNE position, relay K328 energizes through a normally closed contact of thermal relay K327. With K328 energized, K401A operates through a closing cycle. If the main breaker fails to close within the 5 seconds set on thermal relay K327, K327 opens to deenergize relay K328. This opens the K401A circuit to prevent damage to the motor due to overheating. When the main breaker closes, a normally closed K401 contact opens to deenergize thermal relay K327 and the main circuit-breaker motor K401A. With thermal relay K327 deenergized, relay K328 is held in, and the control bus remains energized. With the TUNE-OPERATE SWITCH in the H. V. TUNE position, high voltage is applied through voltage-dropping resistors because shorting relay K402 is prevented from closing by the high-voltage step-start timer K318. In the OPERATE position, the high voltage step-start timer energizes which energizes shorting relay K402 after a time delay. When relay K402 closes, high-voltage-dropping resistors are shorted out and full voltage is applied. Note that step-start timer K318 will not energize unless RF Amplifier AM–738/FRT–22 is in the plate-on condition because of the normally open contact of high-voltage auxiliary relay K1617. This prevents putting Radio Transmitter T–454/FRT–26 in the operate condition with RF Amplifier AM–738/FRT–22 in the plate-off condition.

Page 185, paragraph 57. Add the following note after *b*(3)(*h*):

Note. Subparagraph (*i*) and its note below do not apply to equipments procured on Order No. 50000–Phila–57.

(*i*.1) (Added) Information in this subparagraph applies to equipment procured on Order No. 50000–Phila–57 only. Previous to the above operation, relay K1623 energizes through the normally closed contact of relay K1622. Then, simultaneously with the above operation, main breaker motor K1701A operates through a closing cycle, and thermal relay K1622 energizes. If the main breaker fails to close within the 5 seconds set on thermal relay K1622, K1622 opens to deenergize relay K1623. This opens the K1701A circuits to prevent damage to the motor due to overheating, and it deenergizes the high-voltage auxiliary relay K1619. When the main circuit breaker closes, normally closed contact K1701C opens to deenergize thermal relay K1622 and the main circuit-breaker motor K1701A. With thermal relay K1622 deenergized, relay K1623 is held in and high-voltage auxiliary relay K1617 remains energized.

Page 225, paragraph 67.

e(1)(*d*). After the last sentence add: Connect the signal generator output to the grid of V127.

e(1)(*e*). Change "V–129" to: **V128.**

Page 227, paragraph 67*j*(2)(*c*). Change "pin 7" to: **pin 1.**

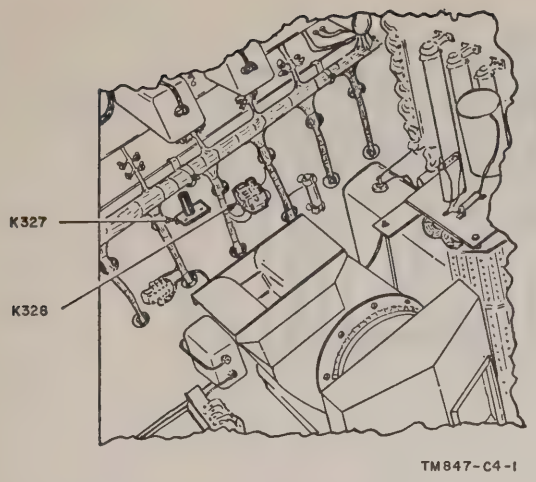

Figure 217.1. (Added) *Relays added in Power Supply Assemblies PP–1088/FRT–26, procured on Order No. 50000–Phila–57, rear view of lower cabinet section.*

Page 491, figure 256.

NOTE. (added) THE SINGLE-SIDEBAND INPUT NETWORK IN THE LOWER LEFT CORNER DOES NOT APPLY TO EQUIPMENTS PROCURED ON ORDER NO. 50000–PHILA–57.

Pages 497 and 499, figures 259 and 260. For equipments procured on Order No. 50000–Phila–57 make the following wiring changes:

E302:

Terminal 7. Delete E96 wire to S310A–2, 3.
Terminal 9. Delete wire to K311–6, and add wire to K320–4 (E5 wire).
Terminal 11. Delete E95 wire to E401–11.
Terminal 11. Add E95 wire to S310A–4.
Terminal 12. Add E95 wire to E401–11.
Terminal 12. Add E3 wire to K320–9.
Terminal 12. Add E96 wire to S310A–2, 3.
Terminal 12. Add E92 wire to E313–266.

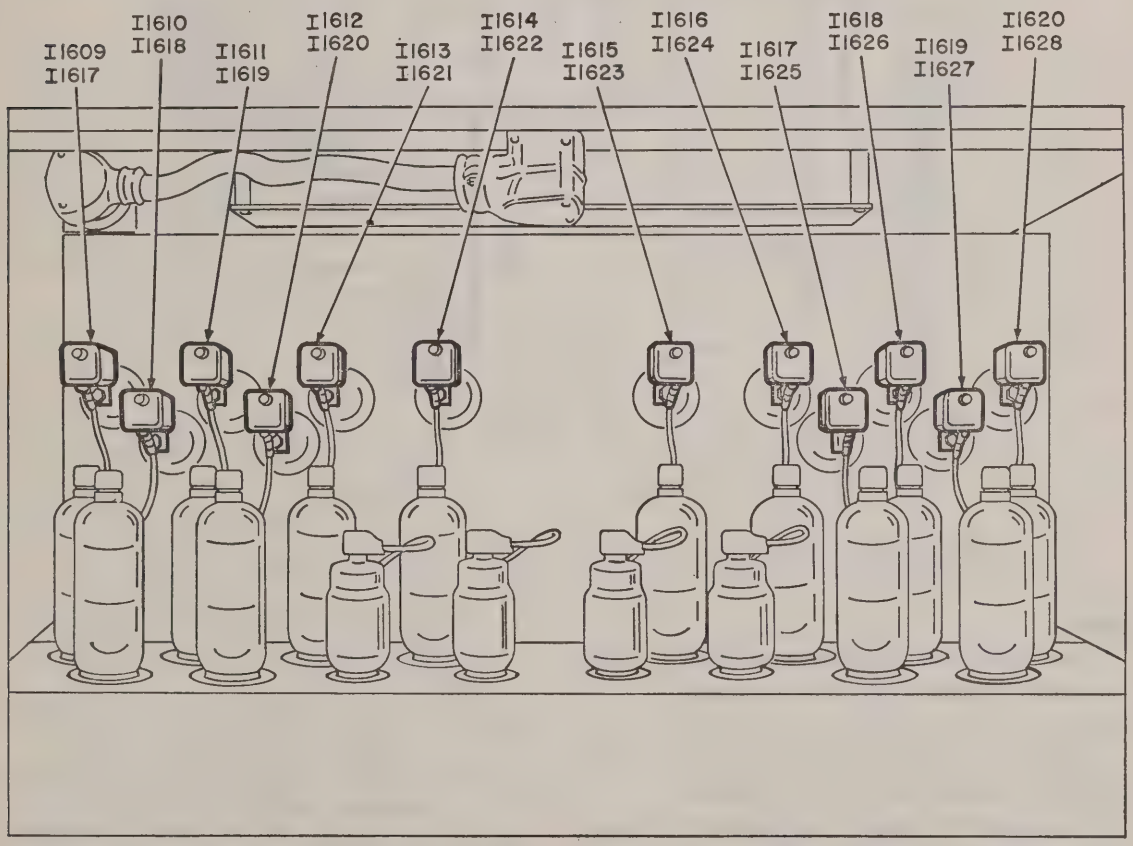

Figure 221.1. (Added) *Arc-back indicators added in Power Supply Assemblies PP–1089/FRT–22, procured on Order No. 50000–Phila–57, rectifier compartment.*

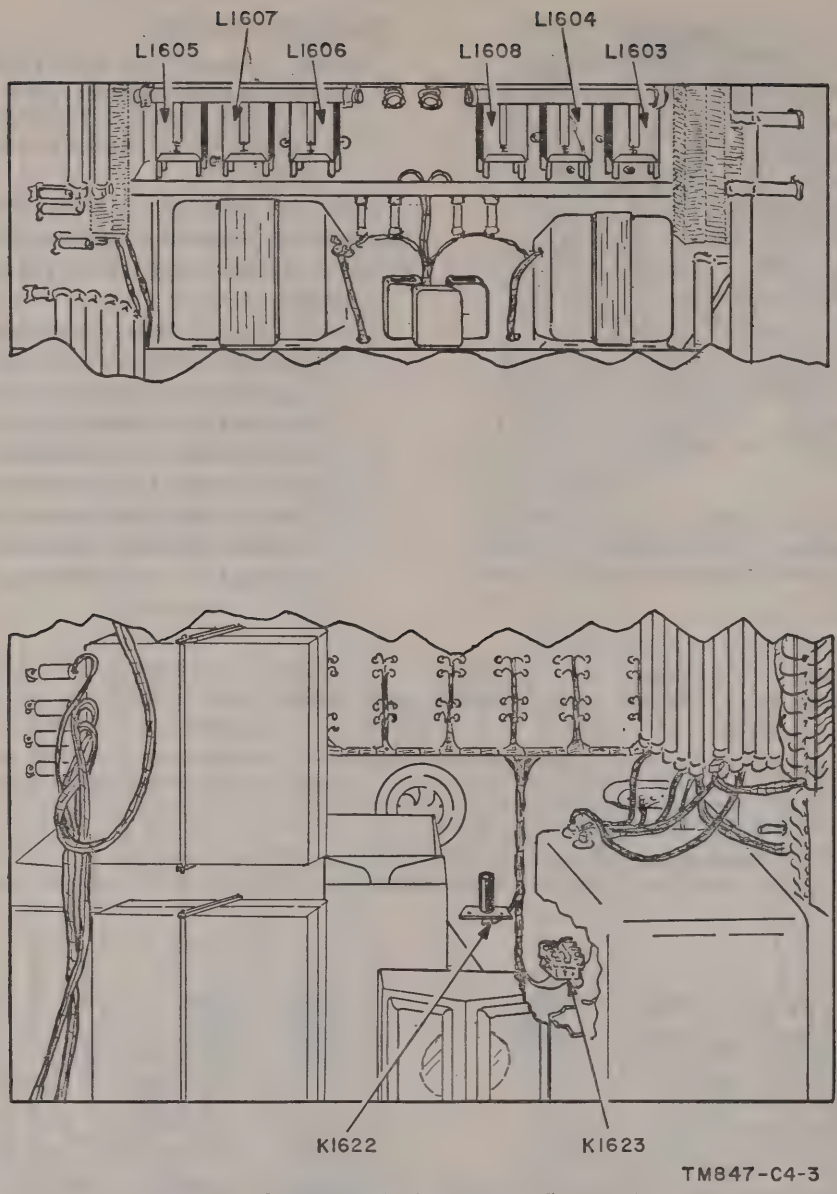

Figure 224.1. Relays and reactors added in Power Supply Assemblies PP–1089/FRT–22, procured on Order No. 50000–Phila–57, rear view of front cabinet wall.

E303:

Terminal 30. Delete wire to E315–4 and add wire to E315–5 (E93 wire).

E306:

Terminal 75. Delete wire to K308–11 and add wire to K308–15 (E3 wire).

Terminal 76. Delete wire to K308–12 and add wire to K308–16 (E6 wire).

Terminal 82. Add E2 wire to E401–114.

Terminal 82. Delete wire to S310A–4 and add wire to S310B–4 (E2 wire).

Terminal 91. Delete wire to K313–4 and add wire to K313–6 (E93 wire).

E308:

Terminal 10. Delete wire to K318–4 and add wire to K311–11 (E3 wire).

Terminal 11. Delete wire to E315–5 and add wire to E315–1 (E95 wire).

Terminal 26. Delete wire to K303–8 and add wire to K328–1 (E5 wire).

E310:

Terminal 58. Delete wire to K308–2 and add wire to K308–6 (E90 wire).

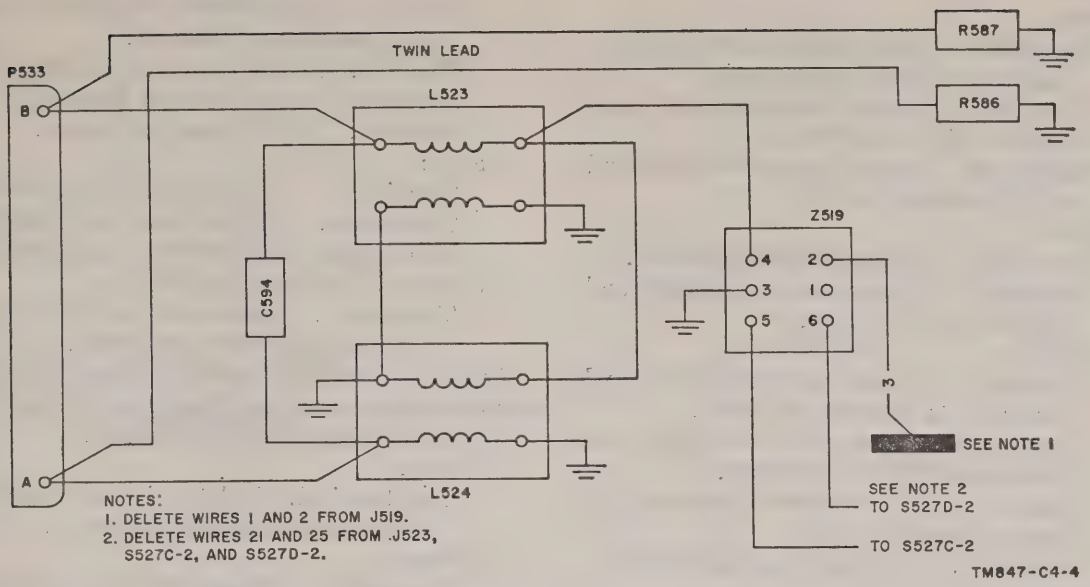

Figure 255.1. Modified single-sideband input network for Radio Transmitting Sets AN/FRT-22 procured on Order No. 50000–Phila–57.

Terminal 59. Delete wire to K308–4 and add wire to K308–8 (E2 wire).

Terminal 91. Delete wire to K313–4 and add wire to K313–6 (E93 wire).

E313:

Terminal 99. Delete wire to K307–3 and add wire to K308–2 (E93 wire).

Terminal 100. Delete wire to K307–4 and add wire to K308–2 (E93 wire).

Terminal 266. Delete wire to K312–2 and add wire to E302–12 (E93 wire).

E315:

Terminal 1. Delete E3 wire to K318–4 and and add E95 wire to K306–8.

Terminal 1. Add E95 wire to E308–11.

Terminal 1. Delete connection between terminal 1 and common terminal of K315 stepping switch (CO wire).

Terminal 2. Delete wire to K308–9 and add wire to K308–13 (E93 wire).

Terminal 4. Delete wire to E303–30 and add wire to K312–2 (E93 wire).

Terminal 5. Delete E95 wire to K306–8 and add E3 wire to K318–4.

Terminal 5. Delete E95 wire to E308–11 and add E93 wire to E303–30.

Terminal 5. Connect terminal 5 to common terminal of K315 stepping switch (CO wire).

K303: Terminal 8. Delete wire to E308–26 and add wire to K328–2 (E5 wire).

K306:

Terminal 2. Delete wire to K308–1 and add wire to K308–5 (E90 wire).

Terminal 4. Delete wire to K308–3 and add wire to K308–7 (E92 wire).

Terminal 6. Delete wire to K308–12 and add wire to K308–16 (E6 wire).

Terminal 8. Delete wire to E315–5 and add wire to E315–1 (E95 wire).

Terminal 8. Add E95 wire to K328–4.

K307:

Terminal 3. Delete E93 wire to E313–99 and add E92 wire to K324–4.

Terminal 4. Delete E93 wire to E313–100 and add E92 wire to K319–3.

Terminal 6. Delete wire to K308–5 and add wire to K308–9 (E5 wire).

K311:

Terminal 1. Delete wire to K308–4 and add wire to K308–18 (E3 wire).

Terminal 3. Delete wire to K308–10 and add wire to K308–14 (E93 wire).

Terminal 4. Add E96 wire to K327–2.

Terminal 6. Delete E5 wire to E302–9.

Terminal 6. Delete E5 wire to K320–4 and add E2 wire to K312–3.

Terminal 11. Delete E3 wire to K320–9.

Terminal 11. Delete wire to K313–5 and add wire to E308–10 (E3 wire).

K312:
Terminal 2. Delete wire to E313–266 and add wire to E315–4 (E93 wire).
Terminal 3. Delete E5 wire to S324–1 and add E2 wire to S310B–4.
Terminal 3. Delete E5 wire to K316–3 and add E2 wire to K311–6.
K316:
Terminal 2. Delete E3 wire to S303–2.
Terminal 3. Delete wire to K312–3 and add S324–1 (E5 wire).
K318:
Terminal 2. Delete wire to K308–5 and add wire to K308–9 (E5 wire).
Terminal 4. Delete wire to E315–1 and add wire to E315–5 (E3 wire).
Terminal 4. Delete wire to E308–10 (E3 wire) (figure 259 only).
Terminal 4. Delete E3 wire to K313–5.
K319:
Terminal 3. Delete wire to K324–4 and add wire to K307–4 (E92 wire).
K320:
Terminal 4. Add E5 wire to K308–0.
Terminal 4. Delete wire to K311–6 and add wire to E302–9 (E5 wire).
Terminal 9. Delete wire to K311–11 and add wire to K313–7 (E3 wire).
Terminal 9. Add E3 wire to E302–12.
K321:
Terminal 1. Delete wire to K308–8 and add wire to K308–12 (E5 wire).
Terminal 3. Delete wire to K308–7 and add wire to K308–11 (E2 wire).
Terminal 5. Delete wire to K308–13 and add wire to K308–17.
K323:
Terminal 4. Delete wire to K308–13 and add wire to K308–17 (E95 wire).
K324:
Terminal 4. Delete wire to K319–3 and add wire to K307–3 (E92 wire).
S302 (LV & BIAS):
Terminal 2. Delete wire to K308–1 and add wire to K308–5 (E90 wire).
Terminal 4. Delete wire to K308–3 and add wire to K308–7 (E92 wire).
S303 (CONTROL CIRCUIT):
Terminal 2. Delete wire to K316–2 and add wire to K311–11 (E3 wire).
S310 (TUNE-OPERATE):
S310A–2 and –3. Delete wire to E302–7 and add wire to E302–12 (E96 wire).
S310A–4. Delete E2 wire to E306–82 and add E95 wire to E302–11.
S310A–4. Delete jumper to S310B–4.
S310B–4. Add E2 wire to E306–82.
S310B–4. Add E2 wire to K312–3.
S315:
Terminal 2. Add E93 wire to E1603–12.
Terminal 4. Add E95 wire to E1603–39.
Terminal 6. Add E96 wire to E1607–268.
S324 (AUTO SHUTDOWN):
Terminal 1. Delete wire to K312–3 and add wire to K316–3 (E5 wire).

Pages 501 and 503, figures 261 and 262. For equipments procured on Order No. 50000–Phila–57 make the following wiring changes:

C1601:
Top terminal. Delete wire to R1651 and add wire to L1605–3 (E95 wire).
E1602:
Terminal 1. Change G9 wire to E1701–1 to E93 wire.
Terminal 1. Delete G9 wire to E1614–1 and add E93 wire to K1622.
Terminal 228. Delete wire to K1621–9 and add wire to K1623–1 (E3 wire).
E1603:
Terminal 12. Add E93 wire to S1621A–1.
Terminal 12. Add E93 wire to S315–2.
Terminal 39. Add E95 wire to S1621B–1.
Terminal 39. Add E95 wire to S315–4.
E1607:
Terminal 268. Add E96 wire to S1621B–2.
Terminal 268. Add E96 wire to S315–6.
E1609:
Terminal 248. Delete wire to R1646 and add wire to L1603–2 (E95 wire).
E1614:
Terminal 1 (lower left corner). Delete wire to E1602–1 and add wire to E1702–1 (G9 wire).
K1616:
Terminal 6. Delete wire to K1617–7 and add wire to K1619–8 (E3 wire).
Terminal 6. Add E3 wire to K1623–2.
K1617:
Terminal 7. Delete E3 wire to K1619–8.
Terminal 7. Delete wire to K1616–6 and add wire to K1623–1 (E3 wire).
K1619:
Terminal 2. Add E92 wire to K1623–6.
Terminal 8. Delete wire to K1617–7 and add wire to K1616–6 (E3 wire).

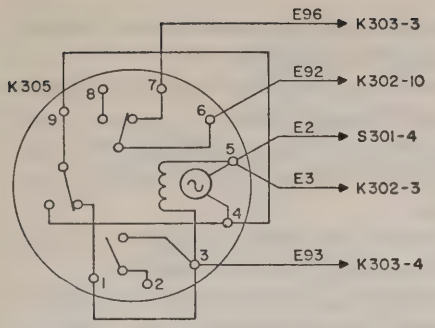

NOTE:
K305 MAY BE ONE OF TWO TYPES. CIRCUITWISE THE TWO TYPES ARE IDENTICAL BUT TERMINAL NUMBERING DIFFERS.

K305 (INTERCHANGEABLE)

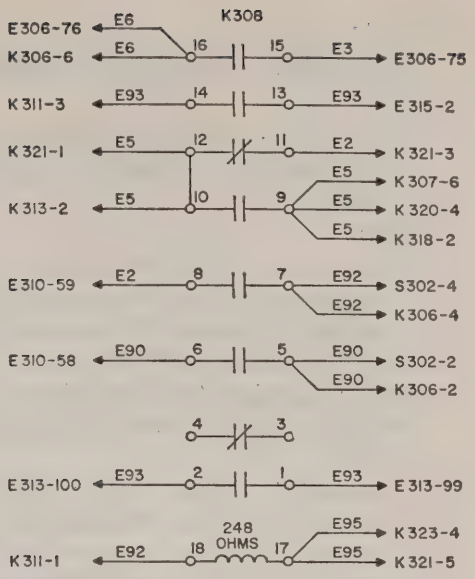

K308 (MODIFIED)

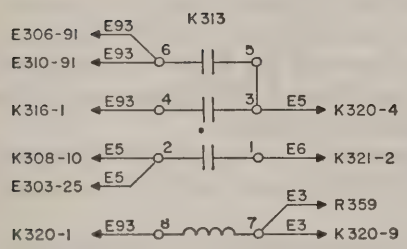

K313 (MODIFIED)

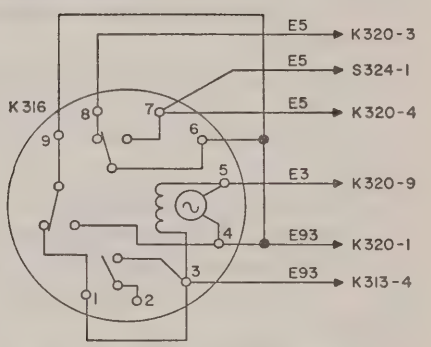

NOTE:
K316 MAY BE ONE OF TWO TYPES. CIRCUITWISE THE TWO TYPES ARE IDENTICAL BUT TERMINAL NUMBERING DIFFERS.

K316 (INTERCHANGEABLE)

NOTE:
K323 MAY BE ONE OF TWO TYPES. CIRCUITWISE THE TWO TYPES ARE IDENTICAL BUT TERMINAL NUMBERING DIFFERS.

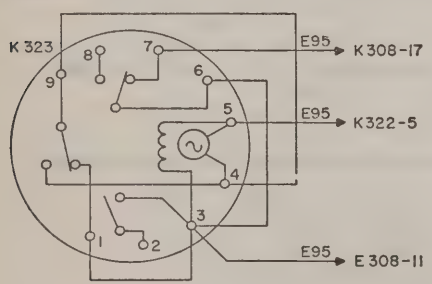

K323 (INTERCHANGEABLE)

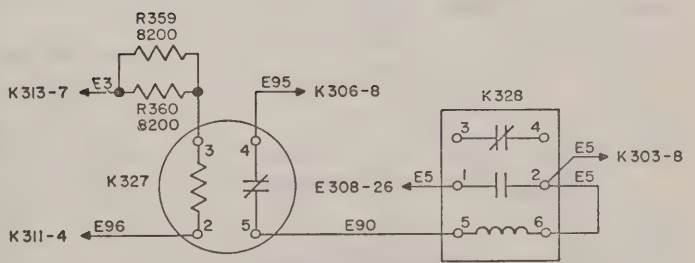

K327 AND K328 (ADDED)

TM847-C4-5

Figure 260.1. (Added) *Modified and added circuits of Power Supply Assembly PP-1088/FRT-26, procured on Order No. 50000-Phila-57.*

K1621:

Terminal 9. Delete E3 wire to E1602–228.

R1613:

Terminal 2. Delete wire to R1646 (R1647 on figure 261) and add wire to L1603–2 (E95 wire).

S1604:

Terminal 2. Delete E93 wire to S1621A–1.

Terminal 4. Delete E95 wire to S1621B–1.

Terminal 6. Delete E96 wire to S1621B–3 (S1621B–2 on figure 261).

S1621A: Terminal 1. Delete wire to S1604–2 and add wire to E1603–12 (E93 wire).

S1621B:

Terminal 1. Delete wire to S1604–4 and add wire to E1603–39 (E95 wire).

Terminal 2. Delete wire to S1604–6 and add wire to E1607–268 (E96 wire).

Page 506, figure 264. For equipments procured on order No. 50000–Phila–57 make the following wiring changes:

E401: Add the reference symbol "E401" to the terminal board at the bottom-center of the figure.

K401: Delete the normally open and normally closed contacts in the relay motor, off K401–7 and K401–10.

K401:

Terminal 7. Delete the E2 wire to E401–7.

Terminal 10. Delete the E9 wire to E401–12 and connect this E9 wire from E401–12 to the top of the K401 motor.

E401:

Terminal 7. Add E96 jumper from E401–7 to E401–12.

Terminal 9. Delete the E0 wire from E401–9 to K401–12 and connect the E0 wire from K401–12 to E401–114.

Terminal 114. Add wire going to power supply terminal E306–82.

Page 507, figure 265. For equipments procured on Order No. 50000–Phila–57 make the following wiring changes:

K1701: Delete the normally open contact E and the normally closed contact D.

K1701: Delete the C2 wire from the right side of normally closed contact C to normally closed contact D.

E1701:

Terminal 1. Add E93 wire to the left side of K1701 motor.

Terminal 1. Add E93 wire to right side of normally closed relay contact K1701–C.

Terminal 1. Add E93 wire going to power supply terminal E1602–1.

Terminal 231. Delete C1 wire to the normally open relay contact K1701–E.

E1702: Add ground lug E1702–1; then connect G9 wire from E1702–1 going to power supply terminal E1614–1.

Page 509, figure 266. For equipments procured on Order No. 50000–Phila–57 make the following wiring changes:

S1621A: Terminals 1 and 3. Delete connection to S1604–2 and connect to S315–2.

S1621A: Terminal 2. Delete connection to S1604–4 and connect to S315–4.

S1621B: Terminals 2 and 3. Delete connection to S1604–6 and connect to S315–6.

K308:

Terminal 1. Change to terminal 5.

Terminal 2. Change to terminal 6.

Terminal 3. Change to terminal 7.

Terminal 4. Change to terminal 8.

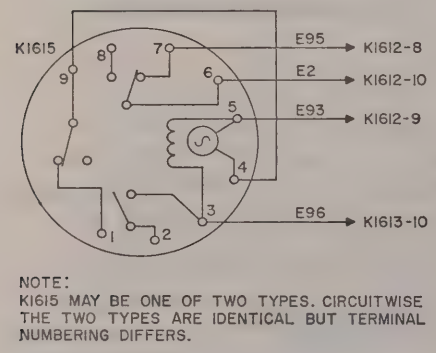

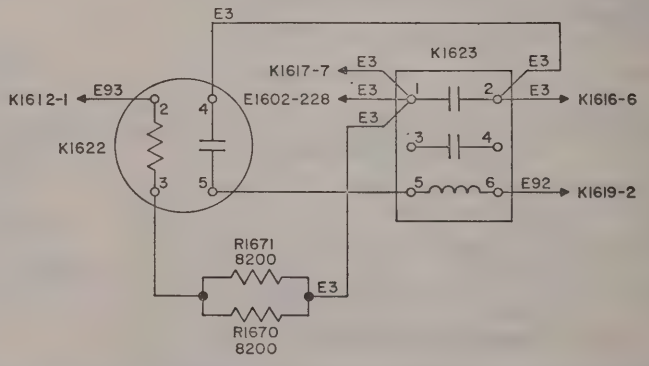

Figure 262.1. (Added) *Modified and added circuits of Power Supply Assembly PP–1089/FRT–22, procured on Order No. 50000–Phila–57, cabling and wiring diagram.*

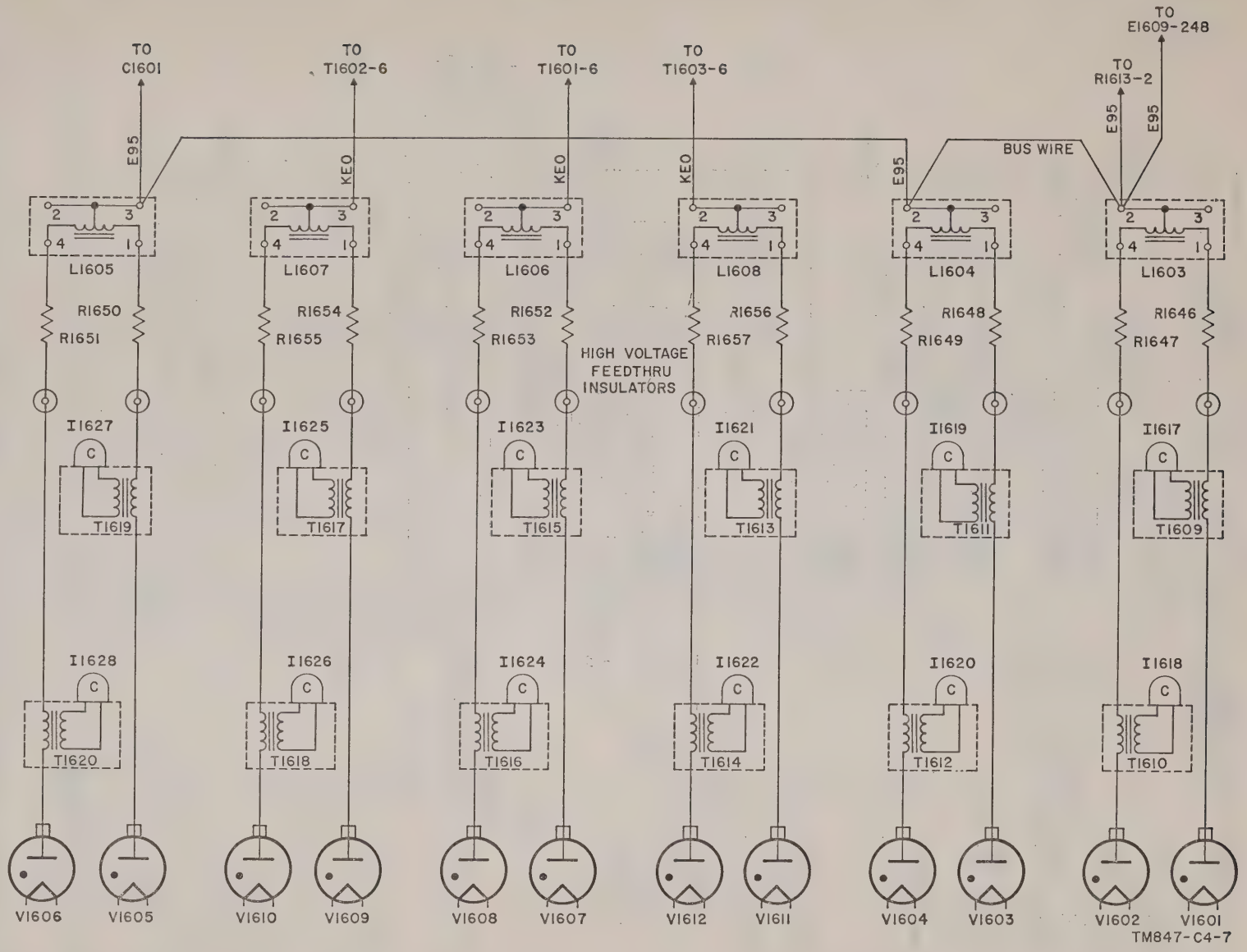

Figure 262.2. (Added) *High-voltage rectifier plate circuits of Power Supply Assembly PP–1089/FRT–22, procured on Order No. 50000–Phila–57, showing wiring and cabling of added reactors and arc-back indicators.*

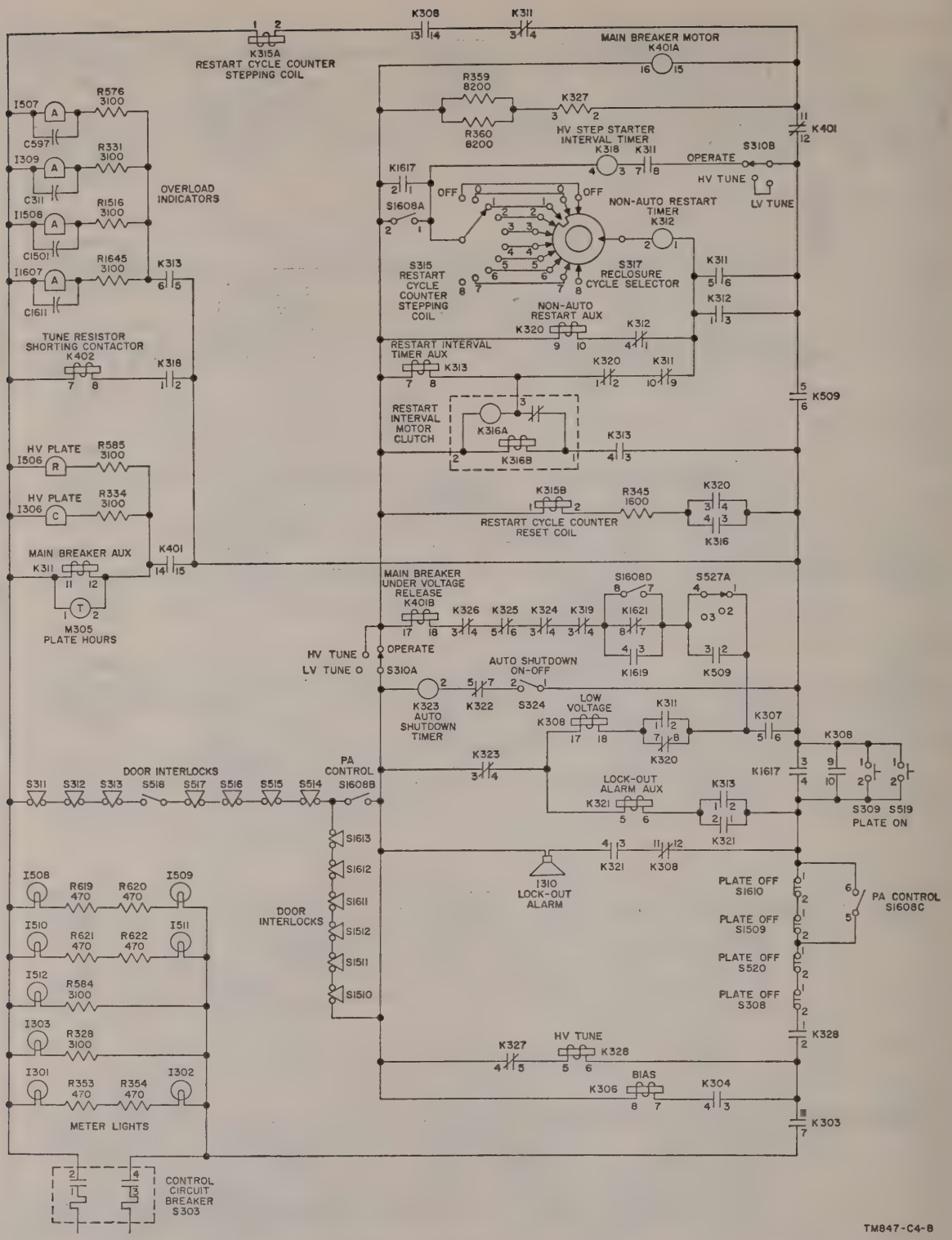

Figure 266.1. (Added) *Modified control circuit of control circuit breaker S303 of Radio Transmitting Sets AN/FRT–22 (Order No. 50000–Phila–57).*

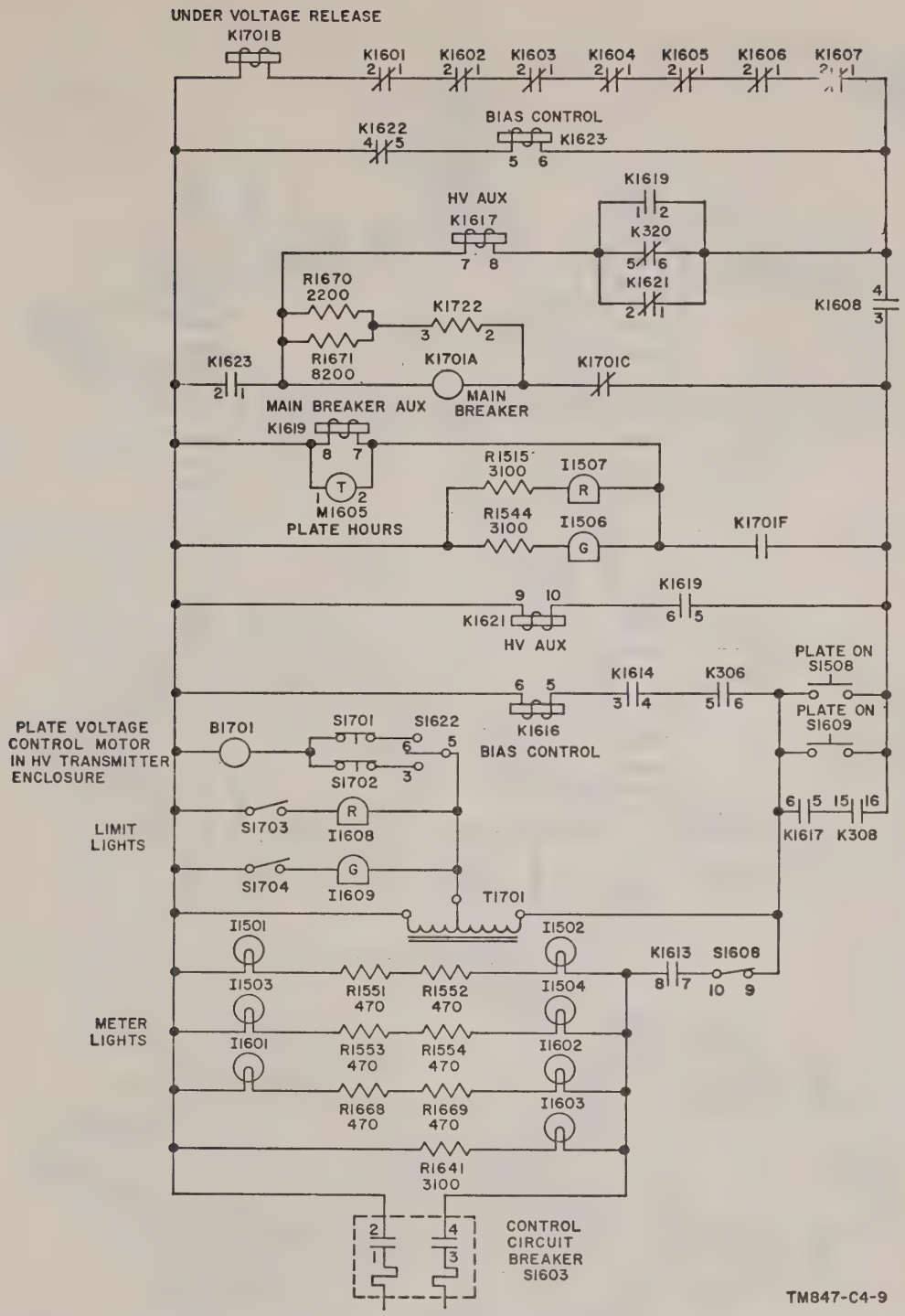

Figure 266.2. (Added) *Modified control circuit of control circuit breaker S1603 of Radio Transmitting Set AN/FRT–22 (Order No. 50000–Phila–57).*

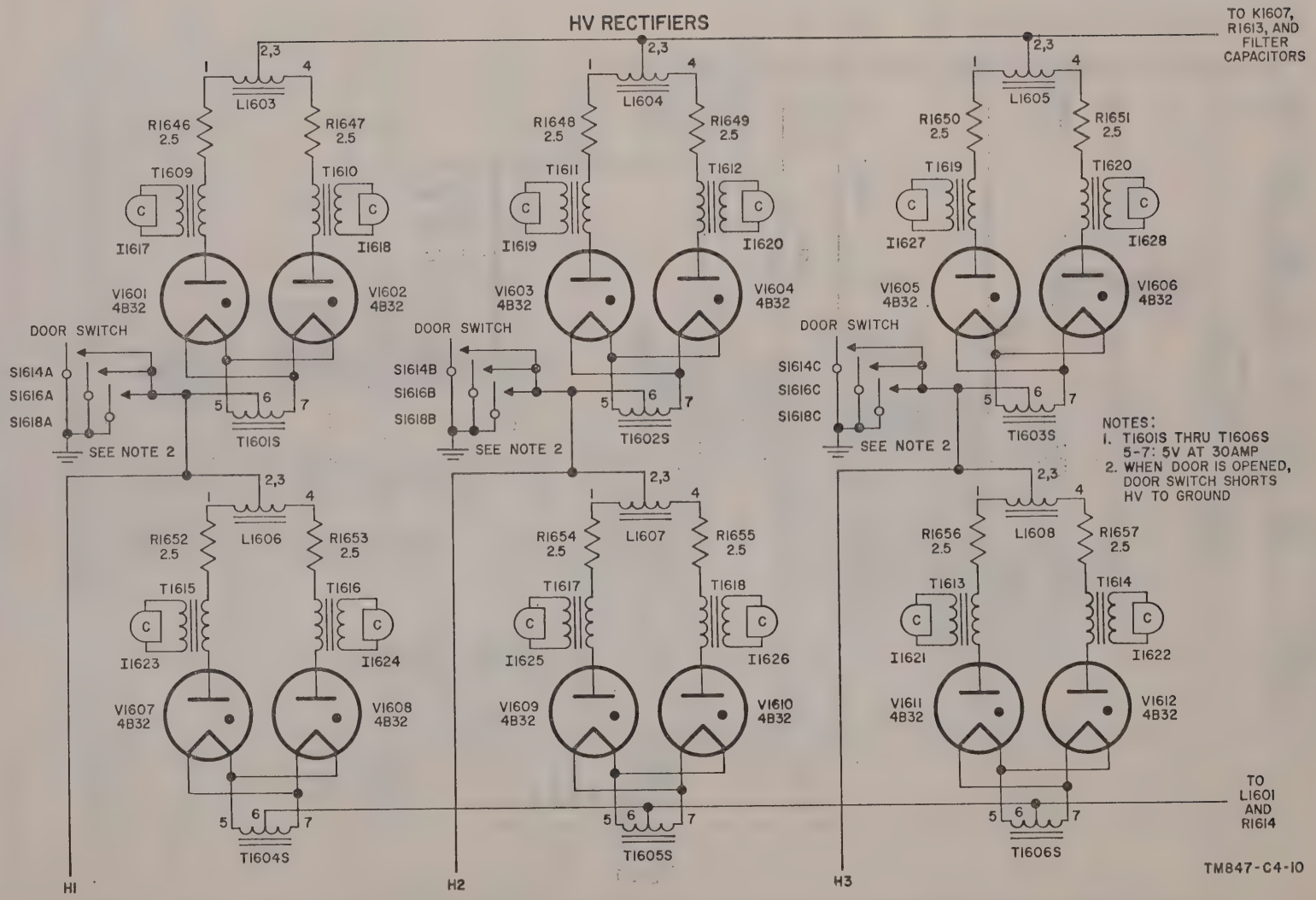

Figure 266.3. (Added) *Modified high-voltage rectifier circuit of Radio Transmitting Set AN/FRT-22 (Order No. 50000-Phila-57).*

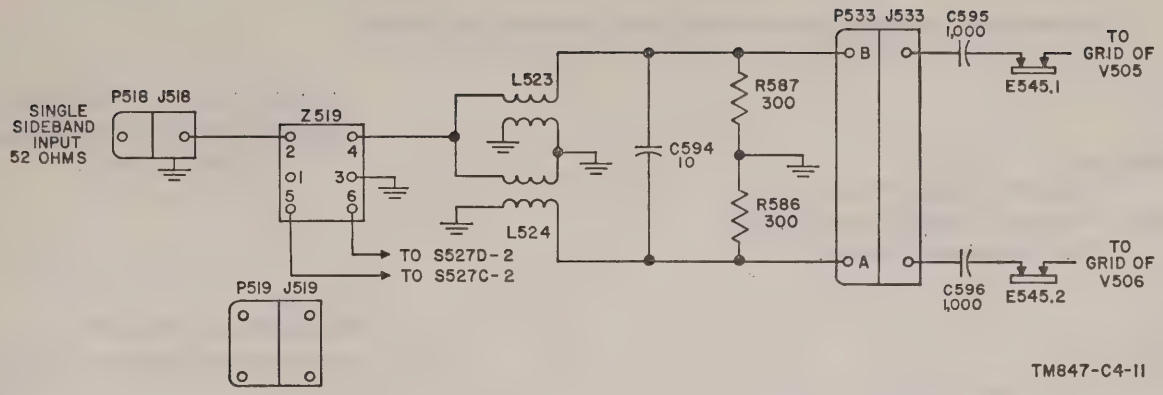

Figure 266.4. (Added) *Modified single-sideband input circuit of Radio Transmitting Set AN/FRT-22 (Order No. 50000-Phila-57).*

[AG 413.44 (30 Jan 58)]

By order of the Secretaries of the Army and the Air Force:

MAXWELL D. TAYLOR,
General, United States Army,
Chief of Staff.

Official:
HERBERT M. JONES,
Major General, United States Army,
The Adjutant General.

THOMAS D. WHITE,
Chief of Staff, United States Air Force.

Official:
J. L. TARR,
Colonel, United States Air Force,
Director of Administrative Services.

Distribution:
Active Army:

ASA
CNGB
Technical Stf, DA
Technical Stf Bd
USA Arty Bd
USA Armor Bd
USA Inf Bd
USA Air Def Bd
USA Abn & Elct Bd
USA Avn Bd
USA Armor Bd Test Sec
USA Air Def Bd Test Sec
USA Arctic Test Bd
USCONARC
USARADCOM
OS Maj Comd
Log Comd
MDW
Armies
Corps
Div
USATC
Ft & Camp
Svc Colleges
Br Svc Sch
Gen Depots
Sig Sec, Gen Depots
Sig Depots
Fld Comd, AFSWP
Engr Maint Cen
Army Pictorial Cen
WRAMC
AFIP
AMS
Port of Emb (OS)
Trans Terminal Comd
Army Terminals
OS Sup Agcy
USA Sig Pub Agcy
USA Sig Comm Engr Agcy
USA Comm Agcy
TASSA
USA Sig Eqp Spt Agcy
USA White Sands Sig Agcy
Yuma Test Sta
USA Elct PG
Sig Fld Maint Shops
Sig Lab
Mil Dist
JBUSMC
Units organized under following TOE's:
11–7
11–16
11–57
11–127
11–128
11–500 (AA–AE)
11–557
11–587
11–592
11–597

NG: State AG; units—same as Active Army.
USAR: None.
For explanation of abbreviations used, see AR 320–50.

U. S. GOVERNMENT PRINTING OFFICE: 1958

EMFO LIBRARY

TECHNICAL MANUAL

RADIO TRANSMITTING SET AN/FRT–22

TM 11–847
CHANGES No. 2

DEPARTMENT OF THE ARMY
WASHINGTON 25, D. C., *7 May 1956*

TM 11–847, 18 February 1955, is changed as follows:

Page 1. Paragraph 1*a*. Delete the second sentence and substitute: In addition to these instructions there is an appendix covering the hook-up wire code.

8.1. Differences in Models
(Added)

In serial numbers 29 and higher of Radio Transmitting Set AN/FRT–22 procured on Order No. 25634–P–53–36–(51) and in all serial numbers of Radio Transmitting Set AN/FRT–22 procured on Order No. 25866–Phila–55–55–(51), Radio Frequency Oscillator O–243A/FRT–24 replaces Radio Frequency Oscillator O–91/FRT–5. For these serial numbers, references in this manual to Radio Frequency Oscillator O–91/FRT–5 should be ignored and reference should be made to chapter 7, which contains installation, operation, and maintenance information for Radio Frequency Oscillator O–243A/FRT–24. Throughout the manual the Radio Frequency Oscillator O–243A/FRT–24 is called the *rf oscillator*.

Page 22. Paragraph 11*d*(4). Add the following after the last sentence:

Where overhead air exhaust duct work is to be used, mount the 16½-inch by 10-inch mycalex insulator frame assembly on top of the Radio Frequency Amplifier AM–738/FRT–22 cabinet. The mycalex insulators carry the leads from the antenna current meters through the air duct, and an opening must be provided in the air duct for the mycalex insulator frame assembly.

Page 24. Paragraph 11*d*(8)(b). Add the following after the last sentence:

Where overhead air exhaust duct work is used, the two copper tubing conductors must feed through the two holes in the 16½-inch by 10-inch myaclex insulator frame assembly which mounts on top of the Radio Frequency Amplifier AM–738/FRT–22 cabinet, and an opening must be provided in the air duct for the mycalex insulator frame assembly.

Page 69. Paragraph 31*a*(5)(d). Change the fifth sentence to: Proper adjustment of the variable components inside this grid housing is indicated when there is exactly 1 turn of variable inductor L509 between its left end and the slider, the two variable capacitors in the top, C533 and C534, are at minimum capacity, and the variable vacuum capacitor, C526, is approximately one-half turn from minimum capacity.

Page 77. Paragraph 39. Delete "Solvent, Dry Cleaning (SD)" in *b*(1) and "carbon tetrachloride" in *b*(2). Substitute "Cleaning Compound (Federal stock No. 7930–395–9542)" in both places. Delete the caution in *b*(2).

CHAPTER 7
RADIO FREQUENCY OSCILLATOR O–243A/FRT–24
(Added)

Section I. DESCRIPTION AND DATA

74. Purpose

Radio Frequency Oscillator O–243A/FRT–24 (fig. 267) is a stable and accurate rf exciter, with a variable rf output within the frequency range of 2.0 to 4.2 megacycles. This equipment is one of two oscillators used as rf exciters for Radio Transmitting Set AN/FRT–22.

EMFO LIBRARY

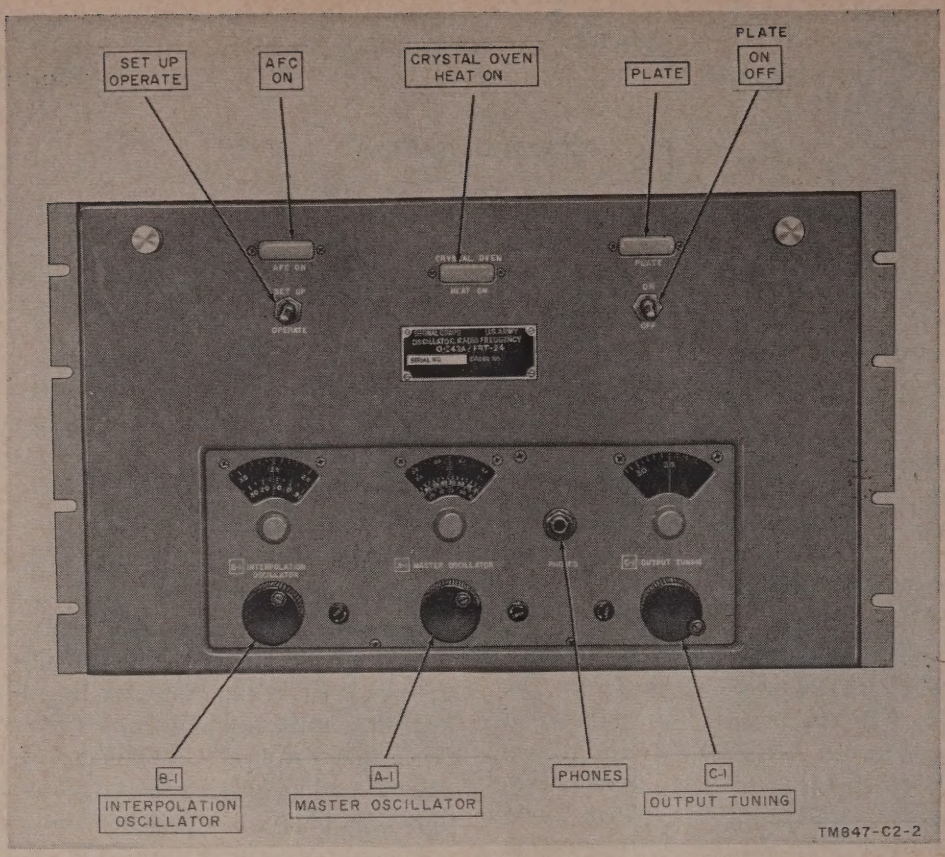

Figure 267. Radio Frequency Oscillator O–243A/FRT–24.

75. Technical Characteristics

Frequency range ..... Stabilized variable-frequency output of 2.0 to 4.2 mc and crystal-controlled outputs of 100 kc and 450 kc.

Type of frequency control..... Automatic frequency control, embodying a closed loop, electromechanical, error-correcting servo feed-back system.

Output ..... Adjustable up to 8.75 volts into a 50-ohm load.

Frequency stability:

Variation in surrounding temperature between 0°C. and 50°C. ..... ±5 cycles per megacycle.

Variation in relative humidity below 95 percent..... ±5 cycles per megacycle.

Variation in ac line voltage within plus or minus 10 percent ..... ±5 cycles per megacycle.

Set-up accuracy ..... Any frequency in the operating range of the equipment may be set within 30 cps without the use of external equipment.

Input power requirements:

Voltage ..... 115-volt, 60-cycle, single-phase ac.

Current:

Starting current ..... 3.8 amp.

Normal operating current.... 2.5 amp.

Standby current (filaments on) ..... 1.7 amp.

Crystal oven heater current.. 0.014 amp.

Number of tubes..... 27.

76. Description of Radio Frequency Oscillator O–234A/FRT–24

The rf oscillator chassis is mounted in a grey metal box which is 10½ inches high, 19 inches wide, and 15½ inches deep. It consists of a front panel and a main chassis which contains an upper deck